AC 5880

UNIVAIR

BELLANCA

SERVICE

CITABRIA

AIRCRAFT CORPORATION

2500 Himalaya Road
Aurora, CO 80011
(303)364-7661

BELLANCA CITABRIA SERVICE MANUAL

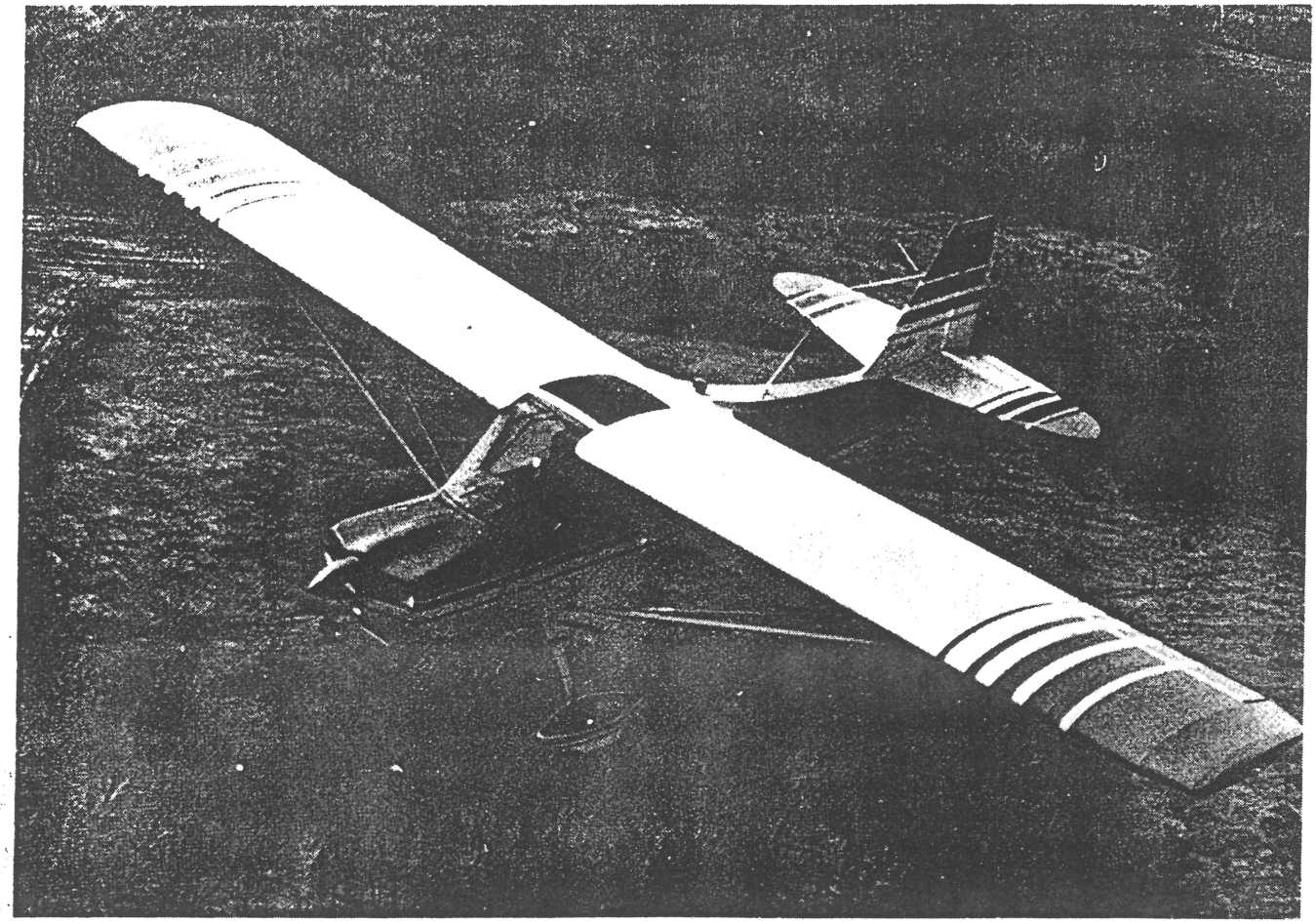

THIS MANUAL APPLIES TO 1973 THRU 1979 MODEL YEARS

UNIVAIR
Aircraft Corporation

ROUTE 3 BOX 59
AURORA, CO. 80011
(303) 364-7661

THIS MANUAL IS A DIRECT COPY OF THE ORIGINAL.
WE ASSUME NO RESPONSIBILITY FOR THE CONTENTS.
UNIVAIR AIRCRAFT CORPORATION

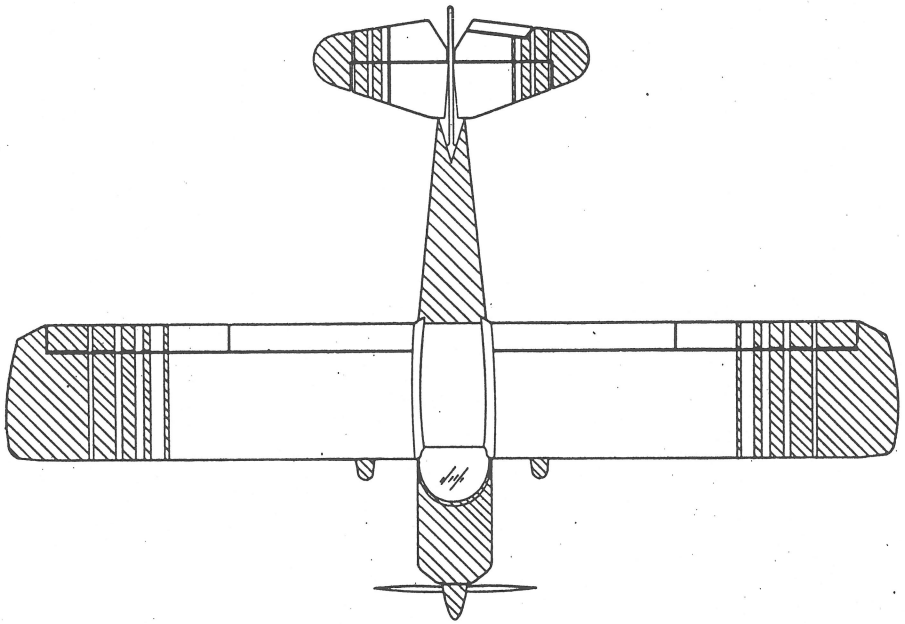

BASIC DATA				
	7ECA	7GCAA	7KCAB	7GCBC
GROSS WEIGHT, NORMAL CATEGORY	1650 LBS.	1650 LBS.	1650 LBS.	1650 LBS.
EMPTY WEIGHT	1060 LBS	1110 LBS	1137 LBS	1150 LBS
USEFUL LOAD	590 LBS	540 LBS	513 LBS	500 LBS
WING AREA	165 SQ FT	165 SQ FT	165 SQ FT	17022 SQ FT
ENGINE LYCOMING	115 HP	150 HP	150 HP	150 HP
	O-235-C1	O-320-A2B OR A2D	IO-320-E2A OR E2B OR AEIO-320-E2B	O-320-A2B OR A2D
PROPELLER DIAMETER	72 IN	73 IN	73 IN	73 IN
FUEL CAPACITY	36 GAL	36 GAL	36 GAL	36 GAL

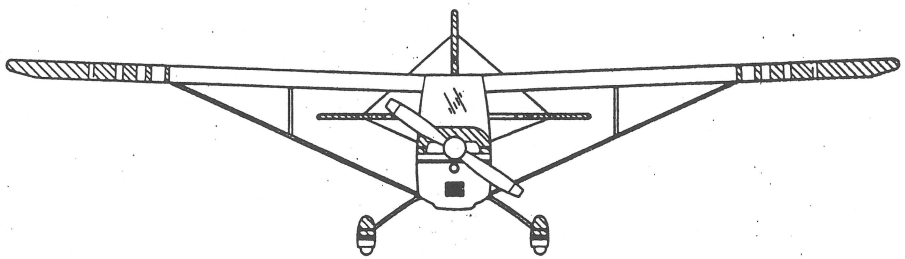

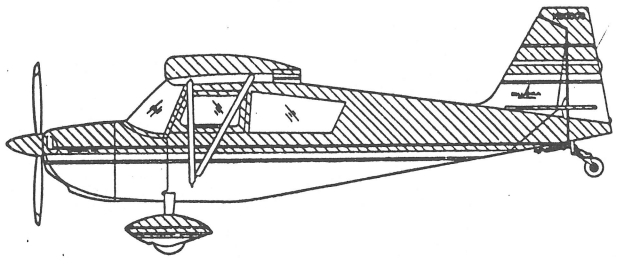

BELLANCA CITABRIA

SCALE • 1/80

MODEL CITABRIA 7ECA, 7GCAA, 7GCBC, 7KCAB

LOG OF REVISIONS

REVISION	PAGES AFFECTED	DESCRIPTION	DATE

FORWARD

This manual is provided as a guide to overhauling, maintaining and repairing the Citabria Models 7ECA, 7GCAA, 7GCBC and 7KCAB aircraft manufactured by Bellanca Aircraft Corporation, Alexandria, Minnesota.

The information covered in this manual will concern only components manufactued by Bellanca Aircraft Corporation. Information necessary for overhaul of the engines, radio, etc., must be obtained from the manufacturer of the individual component.

The information compiled in this manual will be kept current by revisions distributed by Bellanca.

TEMPORARY REVISISIONS

These revisions will be issued to expedite new information to operators. They are not designed to be incorporated into the body of the manual but should be inserted into the front of the manual and retained until replaced by a permanent revision.

PERMANENT REVISIONS

This revision will incorporate and supersede temporary revisions and will be accompanied by a page control chart. These permanent revisions will be issued as deemed necessary by Bellanca.

Revised text material and illustrations will be indicated by a black vertical line in the margin opposite the change.

TABLE OF CONTENTS

		PAGE
1.	DESCRIPTION OF AIRCRAFT	1-1
2.	HANDLING AND SERVICING	2-1
3.	INSPECTION	3-1
4.	STRUCTURES	4-1
5.	SURFACE CONTROLS AND RIGGING	5-1
6.	LANDING GEAR AND BRAKE SYSTEM	6-1
7.	POWERPLANT	7-1
8.	FUEL SYSTEM	8-1
9.	ELECTRICAL SYSTEM	9-1
10.	INSTRUMENTS	10-1
11.	INSTALLATION, REPAIR AND FINISHING OF FABRIC COVERING	11-1

SECTION 1

DESCRIPTION	PAGE
1-1. GENERAL	1-3
1-2. WING	1-3
1-3. EMPENNAGE	1-3
1-4. FUSELAGE	1-3
1-5. LANDING GEAR	1-4
1-6. BRAKE SYSTEMS	1-4
1-7. ENGINE AND PROPELLER	1-4
1-8. FUEL SYSTEMS	1-4
1-9. FLIGHT CONTROLS	1-4
1-10. CABIN HEATER AND FRESH-AIR SYSTEM	1-5

1. SPINNER ASSEMBLY
2. PROPELLER
3. ENGINE COWLING
4. FIREWALL
5. WRAPAROUND
6. WINDSHIELD
7. DOOR STOP
8. PITOT MAST
9. WING NAV. LIGHT
10. AILERON
11. FLAP
12. GAP COVER FRONT
13. GAP COVER CENTER
14. GAP COVER TOP
15. GAP COVER AFT
16. STABILIZER
17. ELEVATOR - RIGHT
18. STABILIZER BRACE WIRES
19. RUDDER
20. FUSELAGE FIN
21. ELEVATOR TRIM TAB
22. LEFT ELEVATOR
23. TAIL WHEEL
24. WING
25. STRUT FAIRING
26. WING STRUTS
27. JURY STRUTS
28. WHEEL PANTS
29. WHEELS
30. LANDING GEAR LEG

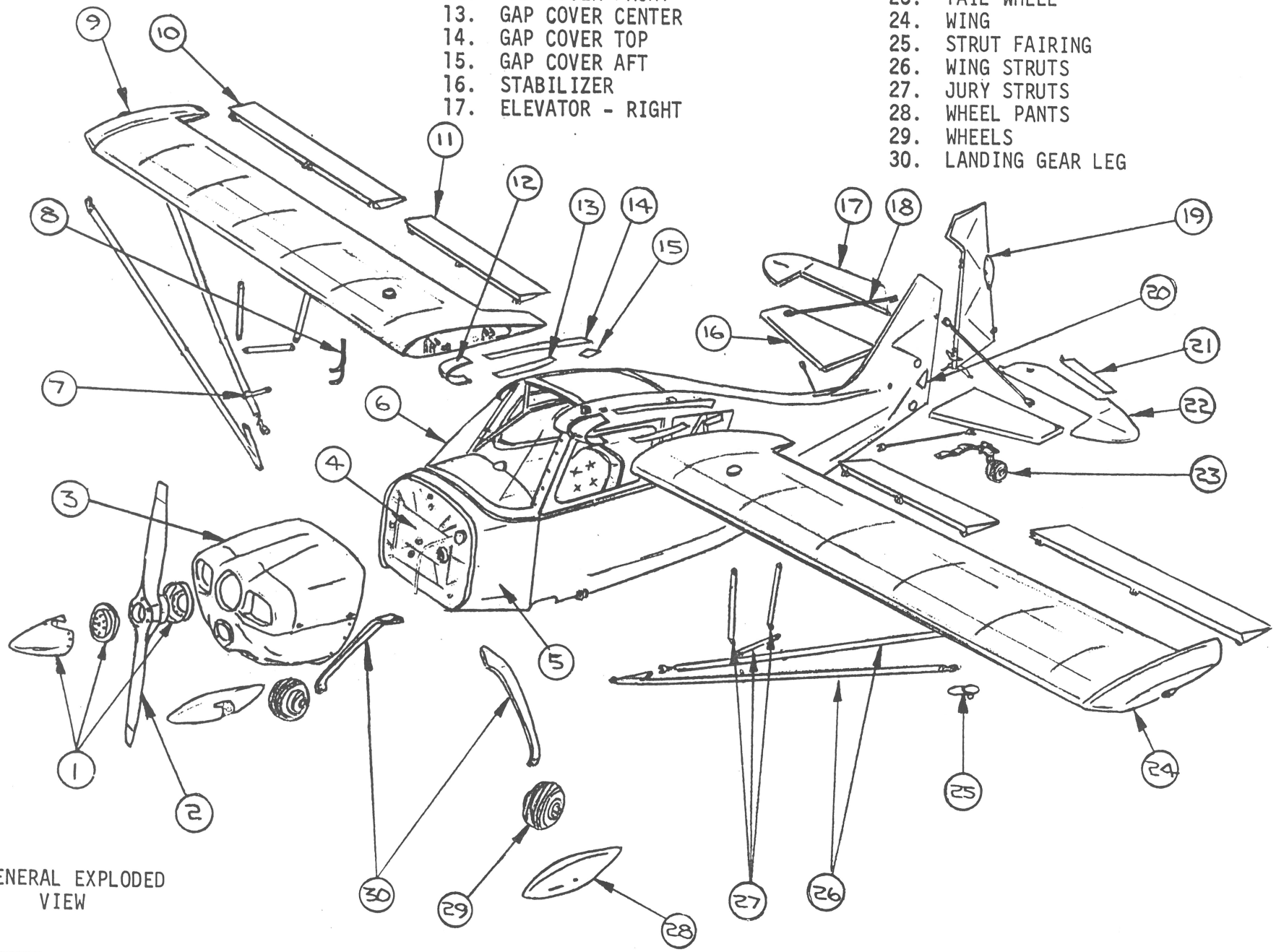

GENERAL EXPLODED VIEW

SECTION 1

DESCRIPTION

1-1. GENERAL

The Bellanca Citabria is a two-place tandem, strutbraced; high-wing monoplane. The fuselage is a welded steel frame covered with dacron fabric. The wings are also covered and have wooden spars and formed aluminum ribs. The aircraft is powered by a Lycoming engine with a fixed pitch metal propeller.

1-2. WING

The wings are of conventional construction with Sitka Spruce spars, formed aluminum ribs, dragwire bracing and covered with dacron fabric. The aileron and flaps are cable controlled.

1-3. EMPENNAGE

The elevators are cable controlled and are aerodynamically balanced. The elevator trim tab is cable activated and located on the left elevator. The trim tab is of aluminum and utilizes a piano hinge attachment. The rudder is cable controlled and aerodynamically balanced. All surfaces are constructed of steel tubing and steel channels and are fabric covered.

1-4. FUSELAGE

The fuselage frame consists of a welded steel tubing assembly. The external fuselage shape is formed by wooden bulkheads,

stringers and formers which are attached to the frame.

1-5. LANDING GEAR

The landing gear is of the fixed gear type consisting of two steel main gear legs and a steerable tailwheel.

1-6. BRAKE SYSTEM

The brakes are disc type, activated by hydraulic systems which are independently operated by heel or toe type brake pedals.

1-7. ENGINE AND PROPELLER

The Citabria models are powered by a Lycoming 115 or 150 HP engines. The propeller is of a fixed pitch type. See Table 2-1 for applicable engine and propeller information.

1-8. FUEL SYSTEM

The fuel system consists of two, 18 gallon formed and welded aluminum wing tanks on Models 7ECA, 7GCBC, 7KCAB and 7GCAA or two standard 13 gallon wing tanks on pre 1974 Model 7ECA. The tanks are interconnected and vented. Fuel is gravity fed to the engine.

1-9. FLIGHT CONTROLS

The flight controls are conventional consisting of a control stick which operates the ailerons and elevators and foot pedals which operate the rudder. Dual controls are provided for the co-pilot.

1-10. CABIN HEAT AND FRESH-AIR SYSTEM

The heated air for the cabin is obtained directly from the exhaust system muffler shroud. Fresh air is taken from vents on the sides of the fuselage and on the left side window. Some models also included an adjustable upper right (or optional left) wing root fresh air vent.

SECTION 2

HANDLING AND SERVICING

		PAGE
2-1.	GENERAL	2-2
2-2.	ACCESS PROVISIONS	2-2
2-3.	GROUND HANDLING	2-3
2-4.	HOISTING	2-3
2-5.	LEVELING	2-5
2-6.	WEIGHING PROCEDURE	2-6
2-7.	MOORING	2-7
2-8.	SETTING THE PARK BRAKES	2-7
2-9.	LOCKING AIRCRAFT	2-8
2-10.	DRAINING FUEL SYSTEM	2-8
2-11.	FILLING AND BLEEDING HYDRAULIC BRAKES	2-9
2-12.	LUBRICATION	2-9
2-13.	RECOMMENDED ENGINE OIL	2-9
2-14.	FILLING ENGINE SUMP	2-12
2-15.	DRAINING ENGINE SUMP	2-12
2-16.	BATTERY REMOVAL & INSPECTION	2-12
2-17.	BATTERY INSTALLATION & SERVICING	2-14
	AIRCRAFT SPECIFICATIONS AND PRINCIPAL DIMENSIONS	2-15

SECTION 2

HANDLING AND SERVICING

2-1. GENERAL

This section provides ground handling and servicing instructions. The aircraft specifications are given in Table 2-1.

2-2. ACCESS PROVISIONS

Figure 2-1 shows the location and identity of the access panels and plates that provide access for purposes of service and maintenance. Remove fabric with sharp knife from all inspection access rings that are not supplied with covers. Install covers on these openings after servicing.

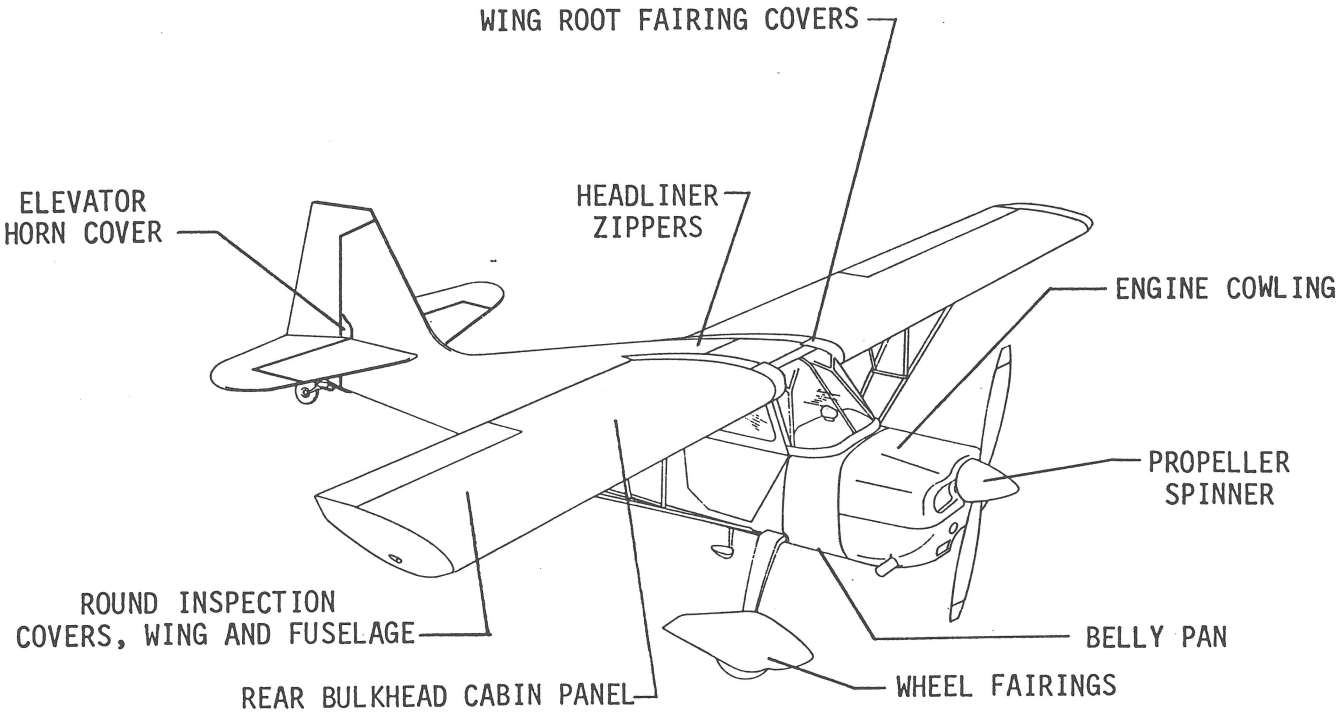

FIGURE 2-1. ACCESS PROVISION

2-3. GROUND HANDLING

Recommended procedures for ground handling are given in the following paragraphs. If the instructions are followed, damage to the aircraft or its equipment will be prevented.

> CAUTION
>
> Use the utmost care at all times during ground handling operations.

2-4. HOISTING

The aircraft may be hoisted by a spreader bar type sling attached to the fuselage-front spar attach fitting bolts or by lifting just inboard of these bolts by a cable arrangement.

One side of the aircraft may be lifted by using a hydraulic jack with the upper end modified to receive the lower wing strut fuselage fitting. This end is to fit over the outside of the strut fitting and hook on the underside of the shear plate. See Figure 2-1A for view of jack end fitting and Figure 2-1B for positioning.

> CAUTION
>
> Be very careful during lifting operation to assure that aircraft is always sufficiently supported such that personnel are not injured and damage is not done to aircraft.
>
> Always block tail wheel during lifting operations.

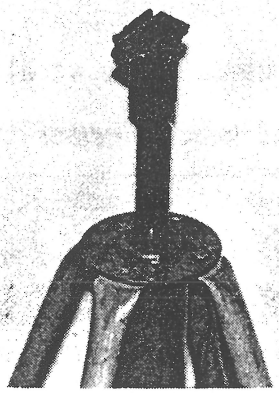

FIGURE 2-1A.
VIEW OF MODIFICATION TO
HYDRAULIC JACK UPPER END.

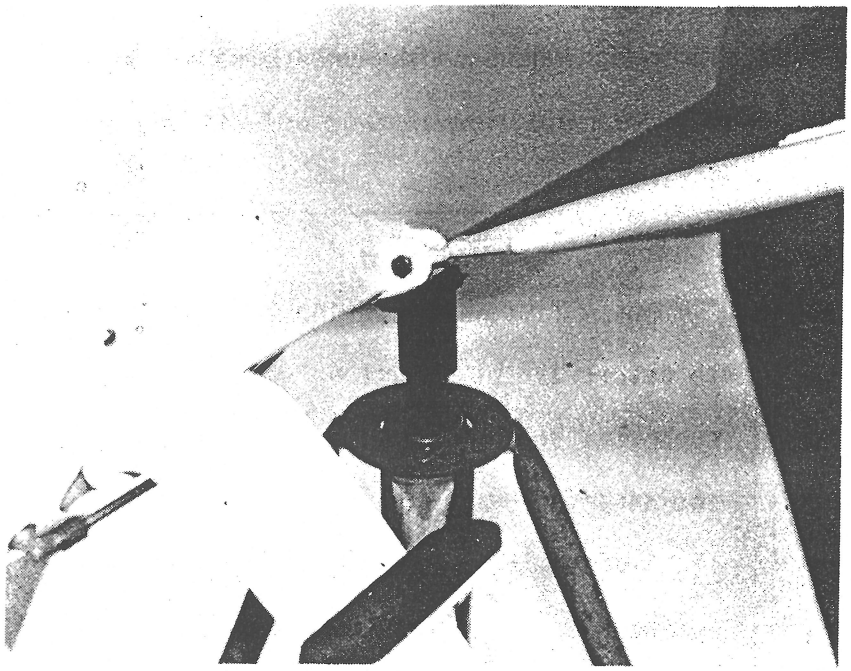

FIGURE 2-1B
POSITIONING OF HYDRAULIC
JACK TO STRUT FITTING.

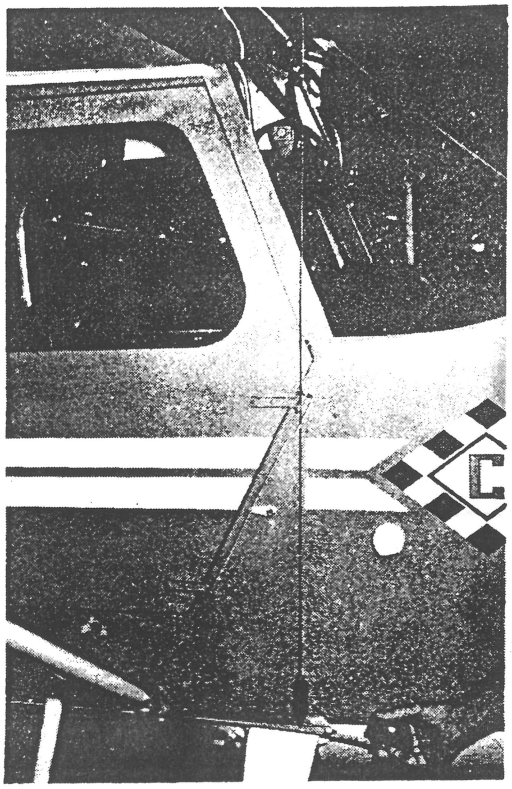

FIGURE 2-2.
LEVELING AIRCRAFT

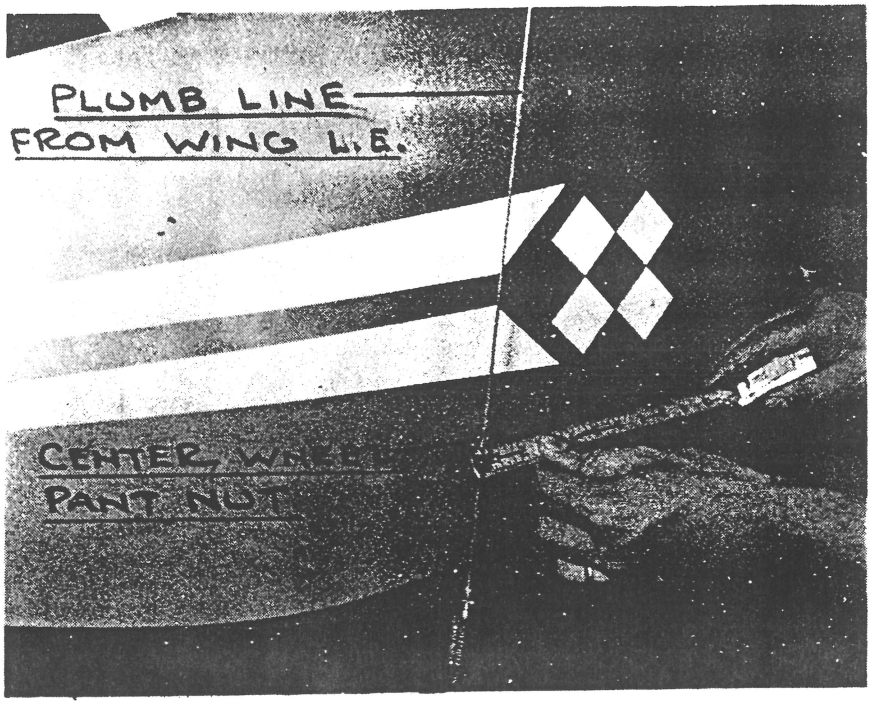

FIGURE 2-3.
MEASURING DATUM TO MAIN WHEELS

2-5. LEVELING (See Figure 2-2)

The aircraft may be leveled while the aircraft is on scales or while the wheels are on the ground.

a. To longitudinally level the aircraft, raise the tail to an approximately level position. Place a suitable support under the tail wheel to hold the aircraft in that position. (If a tail support jig is not available, a 55 gallon drum is suitable.) With the aircraft in this position, drop a plumb line over the leading edge of the wing, just outboard of the wing root gap cover. Adjust the height of the tail so that the plumb line is 10.18 in. forward of front face of fuselage-strut attach fitting. At this point, the aircraft is longitudinally level. (See Figure 2-2)

b. To laterally level the aircraft, place a level across the tube under the instrument panel. Raise or lower one wing by shimming under wheel or deflate an appropriate tire until an accurate level reading is obtained.

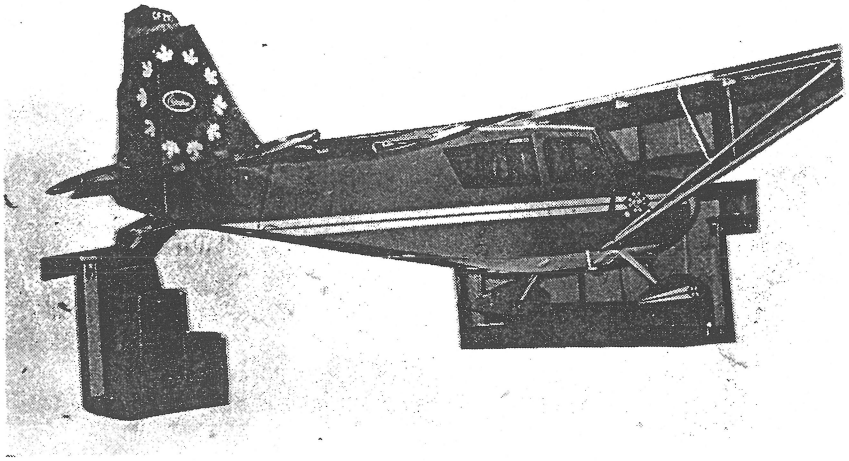

FIGURE 2-4. WEIGHING AIRCRAFT

2-6. WEIGHING PROCEDURE (Refer to Figure 2-4)

a. Position a ramp of the same height as the scales to be used in front of each main landing gear wheel.

b. Place one set of weighing scales in front of each ramp and push the aircraft up on to the scales. Remove the ramp so it will not interfere with the scales. Level the aircraft on the scales with the use of a tail support jig on a third scale under the tail wheel. Chock the main wheels.

c. Level per Section 2-5 and take necessary measurements and weights.

For weight and balance purposes the following data is necessary:

1. W_M = Main wheels weights
2. W_T = Tail wheel weight
3. D_1 = Distance main wheels to tail wheel centerlines.
4. D_2 = Distance wing L.E. (DATUM) to main wheels centerline. (Average these if different side to side)(See Figure 2-3)

d. Example for calculating aircraft center of gravity.

REF: Codes from paragraph (c)

$$\frac{(W_T)(D_1)}{(W_M + W_T)} - (D_2) = \text{C.G. (location inches aft datum)}$$

2-7. MOORING

a. The aileron and elevator controls may be locked by putting the seat belt around the front control stick in a full aft position.

> CAUTION
>
> Secure only the front stick in this manner.

b. Block the wheels.

c. Secure tie-down rope to the wing tie-down ring and the tail wheel assembly at approximately 60° angles to the ground.

2-8. SETTING THE PARK BRAKES

a. To set the brakes, depress the brake pedals and pull out the parking brake knob located under the right side of the instrument panel.

b. To release the brakes, simply push the parking brake knob full in. The brakes will release. Push pedals again for check.

2-9. LOCKING AIRCRAFT

The cabin door is provided with a key lock on the outside.

2-10. DRAINING FUEL SYSTEM

a. To drain the entire system, open the drain plugs on the underside of both wing tanks, quick drain on the left underside of the rear fuselage, and firewall gascolator bowl.

b. To drain only the gascolator bowl, turn fuel valve located under left side of the instrument panel to the "OFF" position and open the gascolator quick drain. On 1974 and newer models, a pull control is located inside of the cowl access door for gascolator draining.

2-11. FILLING AND BLEEDING HYDRAULIC BRAKES (See Figure 2-5)

To fill and/or bleed the brake system, open the bleeder valve on the brake assembly located on the gear leg at the axle attachment and connect a pressure brake bleeder to the valve. Fill brake until brake fluid runs out of the over flow tube at the upper end of right gear leg.

Continue to bleed the brakes until the brake pedals are firm. Fluid may also be added at the reservior on firewall.

2-12. LUBRICATION (See Figure 2-6)

2-13. RECOMMENDED ENGINE OIL

Use a quality brand aviation grade oil of the proper seasonal viscosity. The proper grades of oil are listed in Table 2-2.

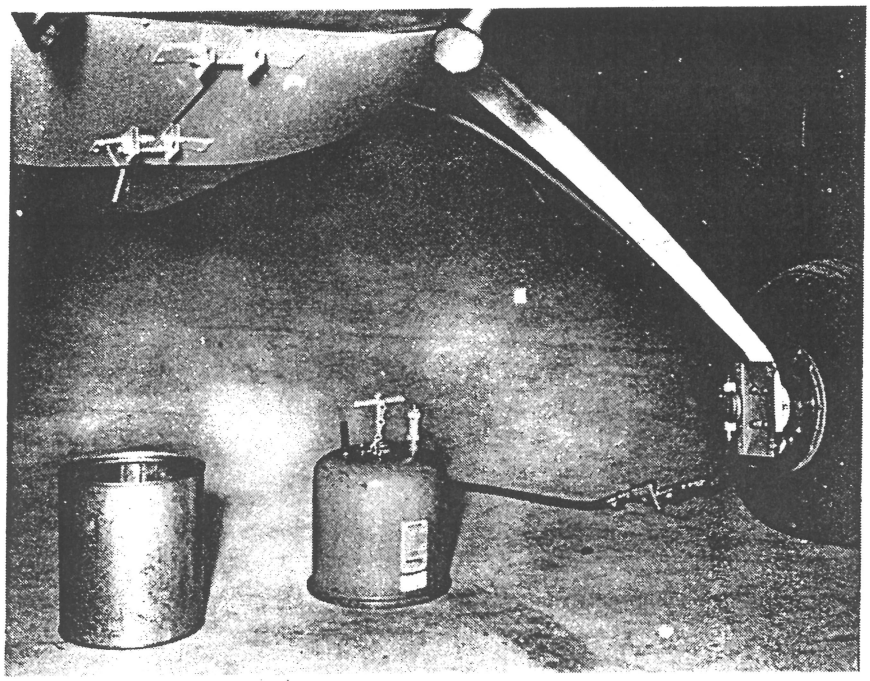

FIGURE 2-5. BLEEDING BRAKE SYSTEM

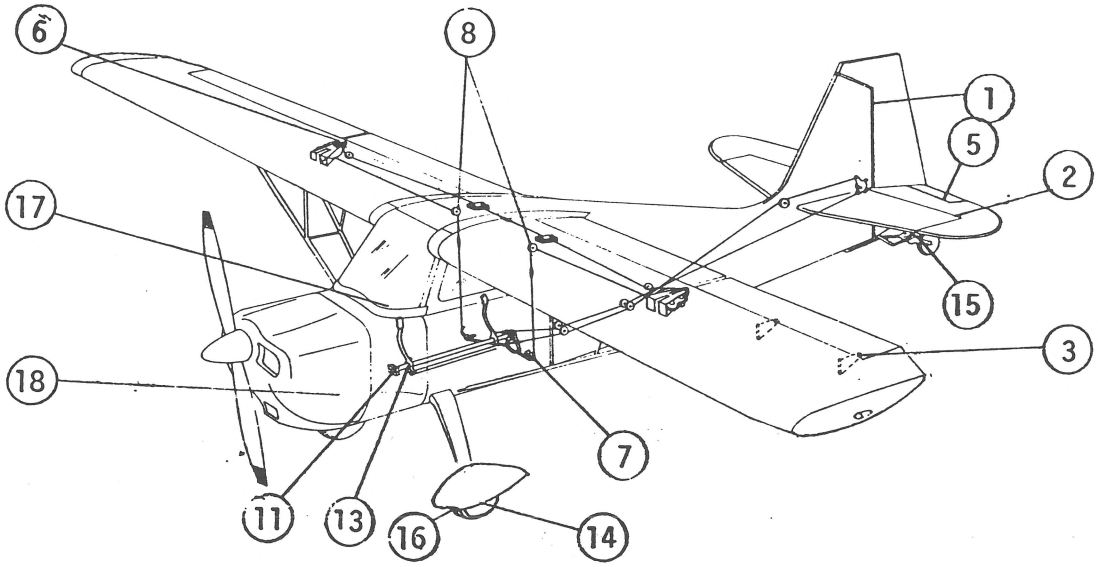

AILERON, ELEVATOR AND RUDDER SYSTEMS

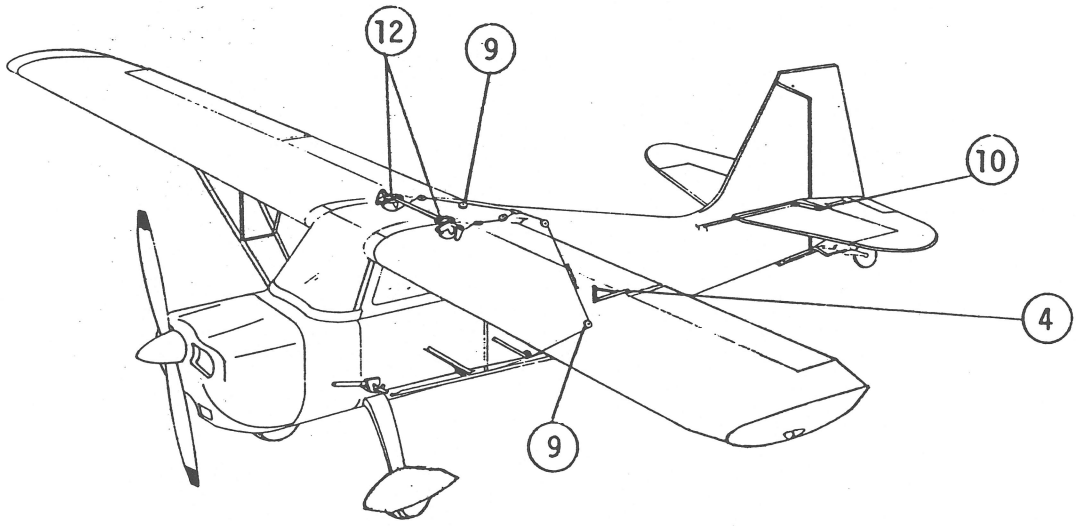

FLAP AND TRIM TAB SYSTEMS

FIGURE 2-6. LUBRICATION DIAGRAM

FIGURE 2-6. LUBRICATION CHART

INDEX NO.	MECHANISM	LUBRICANT CODE	HOUR INTERVAL
1.	Rudder Hinges	A or (B)[1]	100
2.	Elevator Hinges	A or (B)[1]	100
3.	Aileron Hinges	A	100
4.	Flap Hinges	A	100
5.	Trim Tab Hinges	A	100
6.	Aileron Bellcrank Wing	A	100
7.	Aileron Sector (Lower)	A or (B)[1]	100
8.	Aileron Control Pulleys	A	100
9.	Flap Control Pulleys	A	100
10.	Trim Tab Pulleys	A	100
11.	Aileron Torque Tube Bearing	B	500
12.	Flap Torque Tube Bearing	B	500
13.	Stick Socket Bearings	B	500
14.	Main Wheel Bearings	C	100
15.	Tail Wheel Zerk	C	100
16.	Brake Fluid	D	As Req'd
17.	Control Casing	E	As Req'd
18.	Engine Oil	F	50 hrs.

LUBRICANTS	
CODE	TYPE
A	Oil - General Purpose (MIL-L-7870)
B	Grease - General Purpose (MIL-L-7711)
C	Grease - Hi Temp (MIL-L-3545)
D	Brake Fluid (MIL-H-5606)
E	Powdered Graphite
F	Engine Oil - See Table 2-2

CAUTION:

1. Do not use a hydraulic fluid with a castor oil or ester base.
2. Do not apply lubricant to rubber parts.
3. Remove all excess grease from fittings.

NOTES:

1. Lubricant (A) for sleeve bearings, (B) for needle bearings

2-14. FILLING ENGINE SUMP

Fill engine sump with the lubricating oil specified in Table 2-2.

2-15. DRAINING ENGINE SUMP

Drain engine sump by means of the oil drain valve assembly.

2-16. BATTERY REMOVAL AND INSPECTION

7GCAA, 7GCBC, 7KCAB (See Figure 2-7)

a. Battery and battery box may be removed by disconnecting ground and power leads, removing rubber manifold drain tube and disconnecting attachment channel from hold down rods.

b. Inspect all areas adjacent to battery for any indications of acid leakage (dark spots on plywood, discoloration of metal members and control cables, etc.) Check overhead in battery compartment for same items.

c. If any indications of leakage are present, determine cause and location and correct. (See Table 9-1)

d. As soon as possible neutralize all acid contamination using baking soda (sodium bicarbonate) and water solution.

e. Inspect all contaminated areas for damage. Repair as necessary.

f. If any indication of acid spillage in aft fuselage is present, rudder and elevator cables should be replaced. Once contaminated, cables will corrode internally and such corrosion is difficult to detect.

7ECA (See Figure 2-7A)

a. Battery may be removed by removing engine cowling, disconnecting

ground and power leads and disconnecting attachment strap.

b. Inspect all areas and components adjacent to the battery for any indications of acid leakage. (Discoloration or corrosion of metal parts)

c. As soon as possible neutralize all acid contamination using baking soda (sodium bicarbonate) and water solution. Refinish and protect with corrosion proof paint.

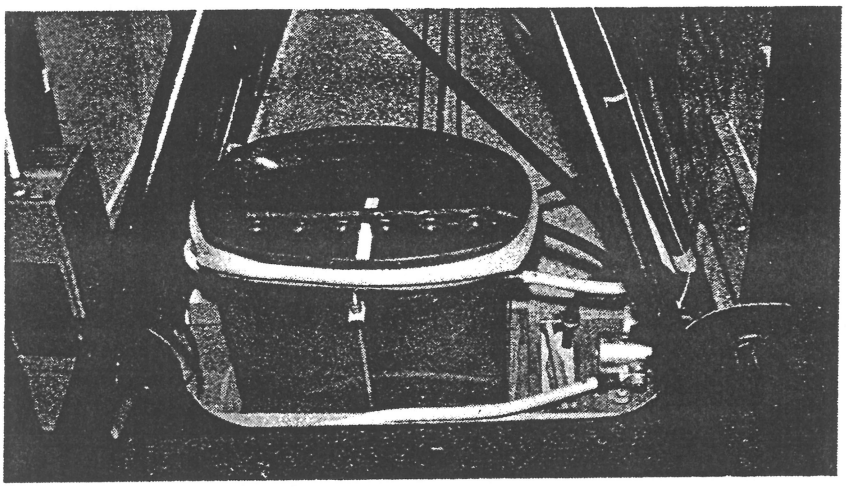

FIGURE 2-7.
INSTALLATION - AFT BATTERY

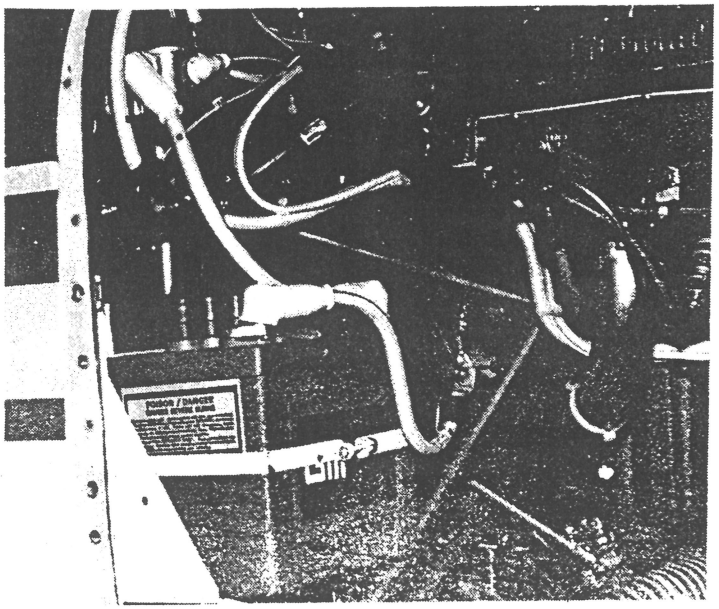

FIGURE 2-7A.
INSTALLATION BATTERY - FIREWALL

2-17. BATTERY INSTALLATION AND SERVICING

a. Check battery for condition and charge.

b. Install battery in reverse order of removal.

c. Maintain acid level at 1/16 inch above plates. Make a final check of acid level after aircraft has been flown a sufficient time to charge battery. Charging may cause acid level to rise and enter battery caps.

d. The battery should be serviced every 50 hours of normal flight (every 10 hours of acrobatic flight) for cleanliness, security of battery, leads and caps.

e. If battery needs replacement, see Table 2-1 for specifics.

TABLE 2-1

AIRCRAFT SPECIFICATIONS AND PRINCIPAL DIMENSIONS

	MODEL 7ECA (O-235-C1)	MODEL 7ECA (O-235-K2C)	MODEL 7GCAA, 7GCBC	MODEL 7KCAB
ENGINE				
Manufacturer	Avco-Lycoming	Avco-Lycoming	Avco-Lycoming	Avco-Lycoming
Model	O-235-C1	O-235-K2C	O-320-A2B or A2D	IO-320-A2B or AEIO-320-E2B
FAA Type Certificate	223	223	274	1E12
Rated HP @ RPM	115 @ 2800	118 @ 2800 (Take-Off) 115 @ 2700 (Max. Cont.)	150 @ 2700	150 @ 2700
Fuel Consumption Cruise: 75% Rated HP gph	6.7	6.7	10	10
Prop. Drive Ratio	1:1	1:1	1:1	1:1
Prop. Shaft Rotation	Clockwise	Clockwise	Clockwise	Clockwise
Bore: Inches	4.375	4.375	5.125	5.125
Stroke: Inches	3.875	3.875	3.875	3.875
Displacement Cubic Inches	233.3	233.3	319.8	319.8
Compression Ratio	6.75:1	8.5:1	7.00:1	7.00:1
Weight (w/Starter and Alt.) lbs.	241	248	272	285
Dimensions:				
Height - Inches	22.99	22.40	22.99	22.99
Width - Inches	32.00	32.00	32.24	32.24
Length - Inches	29.56	20.05	29.56	29.56
Oil SAE Number	See Table 2-2	See Table 2-2	See Table 2-2	See Table 2-2
Oil Sump Capacity Qts.	6	6	8	8
Fuel, Aviation Grade Minimum Octane	80/87	100/130	80/87	80/87
Carb.-Marvel-Schebler	MA-3A or MA-3PA	MA-3A or MA-3PA	MA4SPA	
Injector - Bendix				RSA-5AD1
Magnetos: Bendix Scintilla	S4LN-21 Left S4LN-20 Right		(O-320-A2B) S4LN-21 Left S4LN-20 Right (O-320-A2D)	(IO-320-E2A) S4LN-21 Left S4LN-20 Right (IO-320-E2B) (AEIO-320-E2B)
Magnetos: Slick		4152 Left 4150 Right	4051 or 4151 Left 4050 or 4150 Right	4051 or 4151 Left 4050 or 4150 Right

TABLE 2-1 (con't.)

	MODEL 7ECA (O-235-C1)	MODEL 7ECA (O-235-K2C)	MODEL 7GCAA, 7GCBC	MODEL 7KCAB
Magneto Drive, Ratio to Crankshaft	1:1	1:1	1:1	1:1
Magneto Drive Rotation	Clockwise	Clockwise	Clockwise	Clockwise
Magneto Timing	25° BTC	20° BTC	25° BTC	25° BTC
Spark Plugs (Champion)	EM41E	REM38E	EM41E	EM41E
NOTE: REFER TO LYCOMING SERVICE INSTRUCITONS NO. 1042K FOR OTHER APPROVED SPARK PLUGS.				
Spark Plug Gap Setting	.017-.021	.017-.021	.017-.021	.017-.021
Firing Order	1-3-2-4	1-3-2-4	1-3-2-4	1-3-2-4
Tachometer Drive, Ratio to Crankshaft	0.500:1	0.500:1	0.500:1	0.500:1
Tach. Drive Rotation	Clockwise	Clockwise	Clockwise	Clockwise
Starter Manufacturer	Prestolite	Prestolite	Prestolite	Prestolite
Starter Gear Ratio	Direct Drive	Direct Drive	Direct Drive	Direct Drive
Starter Drive, Ratio to Crankshaft	13.556:1	13.556:1	13.556:1	13.556:1
Starter Drive, Rotation	Counter-Clockwise	Counter-Clockwise	Counter-Clockwise	Counter-Clock.
Alternator	Prestolite	Prestolite	Prestolite	Prestolite
Alternator Drive, Ratio to Crankshaft	3.250:1 Clockwise	3.250:1 Clockwise	3.250:1 Clockwise	3.250:1 Clock.
Vacuum Pump Drive, Ratio to Crankshaft	1.300:1 Counter-Clockwise	1.300:1 Counter-Clockwise	1.300:1 Counter Clockwise	1.300:1 Counte Clockwise
BATTERY				
Type	Aircraft	Aircraft	Aircraft	Aircraft
Manufacturer	Rebat or Gill	Rebat or Gill	Rebat or Gill	Rebat or Gill
Capacity, AMP Hour	25	25	35	35
PROPELLER				
Manufacturer	McCauley	Sensenich	McCauley	McCauley
Type	Fixed Pitch Metal	Fixed Pitch Metal	Fixed Pitch Metal	Fixed Pitch Met
Model	1C90ALM or CLM	72CKS8-0	1C172AGM	1C172AGM
Diameter	72"	72"	72"	72"
Pitch (Range)	46"-50"	48"-52"	50"-60"	50"-60"
Allowable Static RPM	2225-2425	2215-2530	2300-2640	2300-2540

	MODEL 7ECA (O-235-C1)	MODEL 7ECA (O-235-K2C)	MODEL 7GCAA, 7GCBC	MODEL 7KCAB
Manufacturer			Sensenich	Sensenich
Type			Fixed Pitch Metal	Fixed Pitch Metal
Model			74DM6S8-1	74DM6S8-1
Diameter			73"	73"
Pitch (Range)			48"-60"	48"-56"
Allowable Static RPM			2300-2640	2300-2540
FUEL SYSTEM				
Fuel Tanks	2	2	2	2
Capacity (Each), Usable, U.S. Gal.	13 or 17.5	13 or 17.5	17.5	17.5
Unusable Fuel (Each), U.S. Gal.	N.A. or .50	N.A. or .50	.50	.50
LANDING GEAR				
Type	Single Steel Leaf Spring	Single Steel Leaf Spring	Single Steel Leaf Spring	Single Steel Leaf Spring
Wheel Tread, In, (Static)	76	76	76	76
Wheel Base (3 Point) In.	196	196	196	196
Brake Type	Hydraulic Disc.	Hydraulic Disc.	Hydraulic Disc.	Hydraulic Disc.
Tires, Main	600 x 6, 4 Ply	600 x 6, 4 Ply	600 x 6, 4 Ply	600 x 6, 4 Ply
Tire Pressure Main Lbs.	24±2	24±2	24±2	24±2
Tire - Tailwheel	2.80 x 2.50	2.80 x 2.50	2.80 x 2.50	2.80 x 2.50
OVERALL				
Certification Basis	CAR 4a	CAR 4a	CAR 4a	CAR 4a
Category	Normal, Acrobatic	Normal, Acrobatic	Normal, Acrobatic	Normal, Acrobatic
Gross Weight Lbs.	1650	1650	1650	1650
Width (Span) In.	401	401	401 (7GCAA) 413.4 (7GCBC)	401
Length (Level) In.	272	272	272	272
Height (3 Point) In.	82	82	82	82

TABLE 2-1 (con't.)

	MODEL 7ECA (O-235-C1)	MODEL 7ECA (O-235-K2C)	MODEL 7GCAA, 7GCBC	MODEL 7KCAB
Height, Propeller Hub, Thrust Line Level In.	45	45	45	45
WINGS				
Airfoil Section	NACA 4412	NACA 4412	NACA 4412	NACA 4412
Span In.	401	401	401 (7GCAA) 413.4 (7GCBC)	401
Cord In.	60	60	60	60
Dihedral, Degrees	2°	2°	2°	2°
Incidence, Degrees	1°	1°	1°	1°
Aileron Area, Sq. Ft. Total	16.54	16.54	16.54	16.54
Wing Area, Sq. Ft.	165	165	165 (7GCAA) 170.2 (7GCBC)	165
Flap, Sq. Ft. Total			18.36 (7GCBC)	
EMPENNAGE				
Stabilizer Overall Span In.	122.25	122.25	122.25	122.25
Stabilizer Incidence, Degrees	-5°	-5°		-5°
Stabilizer Area, Sq. Ft.	12.25	12.25	12.25	12.25
Elevator Area, Sq. Ft.	13.75	13.75	13.75	13.75
Fin Area, Sq. Ft.	7.02	7.02	7.02	7.02
Rudder Area, Sq. Ft.	6.83	6.83	6.83	6.83

TABLE 2-2 - RECOMMENDED LUBRICATING OIL

Average Ambient Air	Recommended Grade Oil	
	Single Viscosity	Mult: Viscosity
Above 60°	SAE 50	40 or 50
30° to 90°F	SAE 40	40
0° to 70°F	SAE 30	40 or 20W-30
Below 10°F	SAE 20	20W-30
Oil Sump Capacity		8 U.S. Quarts
Oil Sump Capacity - 7ECA		6 U.S. Quarts
Minimum Operating Quantity		6 U.S. Quarts (4 U.S. Quarts 7ECA)
Minimum Safe Quantity in Sump		2 U.S. Quarts

SECTION 3

INSPECTION

		PAGE
3-1.	INTRODUCTION	3-2
3-2.	RECOMMENDED LUBRICANTS	3-2
3-3.	INSPECTION REQUIREMENTS	3-2
3-4.	OVER LIMITS INSPECTION	3-3
3-5.	SPECIAL INSPECTIONS	3-3
	INSPECTION AND OVERHAUL REPORT	3-5

SECTION 3

INSPECTION

3-1. INTRODUCTION

This section provides instructions for conducting inspections. These inspections are described in paragraphs 3-3 and 3-4. Repair or replacement instructions for those components found to be unserviceable at inspection may be found in the section covering the applicable aircraft system.

> **CAUTION**
>
> When working on engines, ground the magneto primary circuit before performing any operation.

3-2. RECOMMENDED LUBRICANTS

Refer to Recommended Lubricants, Section 2, for lubrication servicing instructions.

3-3. INSPECTION REQUIREMENTS

The required inspection procedures are listed in Table 3-1. The inspection procedure is broken down into major groups which are Engine Run-Up, Propeller, Engine, Cabin, Fuselage and Empennage, Wing, Landing Gear, Operational Inspection and General. The first column in each group lists the inspection of procedure to be performed. The second column is divided into four columns indicating the required inspection intervals of 50 hours, 100 hours, 500 hours and 1,000 hours. Each inspection or operation

is required at each of the inspection intervals as indicated by and (X). If an item is not entirely accessible or must be removed, refer to the applicable section of this manual for instructions on how to gain access or remove the item.

3-4. OVERLIMITS INSPECTION

If the airplane has been operated such that any of its components have exceeded their maximum operational limits, check with the appropriate manufacturer.

3-5. SPECIAL INSPECTIONS

The inspections described in this manual pertain to inspections required under normal operating conditions. Special operating conditions may require additional inspection requirements.

Inspections which may be required as a result of an incident in which structural or other damage is possible are not described in this manual because of the unique nature of each incident. Such incidences may be described by but are not limited to the following: Contact of any part of the aircraft with or by any object not designed for such contact while the aircraft is in motion or not in motion; a complete or partial turnover; experiencing high loads during flight as the result of turbulence or maneuvering; takeoff, landing or taxi on excessively rough terrain; operating in a severe enviornment (temperature, dust, precipitation, chemicals, etc.); damage due to high winds or hail; complete or partial submersion in fresh or salt water; failure to

operate the aircraft within design operating limits and/or not properly servicing and maintaining the aircraft; lightning strike; damage caused by animals and birds; etc. The aircraft must be thoroughly inspected by an appropriately rated mechanic after such an incident. The inspector must inspect all areas where there is potential for damage in addition to those areas where the damage is obvious. It is possible to have hidden damage in an area remote from the obvious damage; inspection of such areas may require additional inspection accesses. Contact Bellanca and/or your local FAA GADO for assistance if you have any questions concerning proper inspection procedure.

INSPECTION AND OVERHAUL REPORT

The recommended inspection procedures are listed in Table 3-1, which indicates the operations to be performed and the inspection time intervals of 50, 100, 500, or 1,000 hours. Where necessary, detailed inspection instructions are given in the applicable sections of this manual.

Both the annual and the 100 hour inspections are complete inspections of the aircraft, identical in scope. Inspections must be accomplished by persons authorized by the Federal Aviation Administration in the United States or by the equivalence regulatory agency in foreign countries.

TABLE 3-1

INSPECTION REPORT

	INSPECTION TIME			
	50	100	500	1000
A. ENGINE RUN-UP				
1. Check general engine smoothness.	X	X	X	X
2. Check all engine instruments.	X	X	X	X
3. Check magneto RPM drop and differential.	X	X	X	X
4. Check for RPM drop with Carb. Heat on.	X	X	X	X
5. Check operation of engine controls.	X	X	X	X
6. Check alternator operation.	X	X	X	X
7. Check operation of brakes & ground handling.	X	X	X	X
8. Check electric fuel pump operation & fuel pressure with emergency fuel pump on and off. (7KCAB only)	X	X	X	X
B. PROPELLER GROUP				
CAUTION: Ground magneto primary circuit before working on engine or propeller.				
1. Inspect blades for nicks and cracks.	X	X	X	X
2. Inspect spinner and backplate.	X	X	X	X
3. Remove spinner.		X	X	X
4. Check propeller mounting bolts, torque and safety.		X	X	X
5. Check propeller for track ±1/8 in.		X	X	X
C. ENGINE GROUP				
1. Remove engine cowl.	X	X	X	X
2. Clean and check cowling for cracks, distortion, and loose or missing fasteners.	X	X	X	X

s ed 5-1-79

TABLE 3-1

INSPECTION REPORT

(Con't)

	INSPECTION TIME			
	50	100	500	1000
3. Drain oil sump.	X	X	X	X
4. Remove and clean oil screen, check for foreign particles.		X	X	X
5. Check oil temp. gauge fitting for leaks and security.	X	X	X	X
6. Check oil lines and fittings for leaks, security chafing, dents and cracks.	X	X	X	X
7. Remove oil breather line, clear and inspect.		X	X	X
8. Clean and check oil radiator cooling fins.		X	X	X
9. Remove and flush oil radiator.			X	X
10. Remove oil sump and inspect inverted oil system. (See Bellanca Manual 320) 7KCAB only equipped with IO-320-E2A or E2B engine.		400 HOURS		
11. Replace oil sump. (7KCAB only) per item 10.		400 HOURS		
12. Fill engine with oil.	X	X	X	X
13. Clean engine.	X	X	X	X
14. Check condition of spark plugs, clean and adjust gap as required per Lycoming Service Instruction 1042.		X	X	X
15. Check ignition harness and insulators for high tension leakage and continuity.		X	X	X
16. Check magneto point gap setting.		X	X	X
17. Check carburetor or injector for condition and security.	X	X	X	X
18. Remove rocker box covers and check for improper oiling and wear.		X	X	X
19. Check magnetor for oil leakage.		X	X	X

TABLE 3-1

INSPECTION REPORT
(Con't)

	INSPECTION TIME			
	50	100	500	1000
20. Check breaker points for proper lubrication.		X	X	X
21. Check distributor block for cracks, burned areas or corrosion and weight of contact springs.		X	X	X
22. Check engine magneto timing.		X	X	X
23. Overhaul or replace magnetos if necessary (See Note 1).				
24. Remove air filter and clean or replace as required.	X	X	X	X
25. Turn fuel valve off, drain gascolator drain, clean gascolator filter (See Note 2).	X	X	X	X
26. Remove and clean carburetor or injector inlet strainer (See Note 2).	X	X	X	X
27. Check condition of carburetor or injector air box and door.		X	X	X
28. Check intake seals for leaks and clamps for tightness.		X	X	X
29. Inspect condition of flexible fuel lines.		X	X	X
30. Replace flexible fuel lines (See Note 1).				X
31. Check fuel system for leaks with emergency fuel pump on (place mixture in rich until air is purged from system, then place in idle cut-off. (7KCAB only)		X	X	X
32. Check throttle, carb. heat and mixture for travel and operating condition.		X	X	X
33. Inspect exhaust stacks, connections and gaskets.		X	X	X
34. Inspect mufflers, tail pipe extensions and muffler hangers.		X	X	X
35. Remove heat muff and check mufflers for cracks. (On dual mufflers, inspect internal baffles.)		X	X	X

TABLE 3-1

INSPECTION REPORT

(Con't)

		INSPECTION TIME			
		50	100	500	1000
36.	Check condition of cabin heat and other flexible tubes.		X	X	X
37.	Check breather tube at engine and oil separator.		X	X	X
38.	Check crankcase for cracks, leaks and security of seam bolts.		X	X	X
39.	Check engine mount for cracks and loose mountings.		X	X	X
40.	Check all engine baffles for security, cracks and seals.		X	X	X
41.	Check rubber engine mount bushings, replace as required.		X	X	X
42.	Check firewall seals.		X	X	X
43.	Check condition and tension of alternator drive belt.		X	X	X
44.	Check condition of alternator and starter.		X	X	X
45.	Lubricate per Figure 2-6.		X	X	X
46.	Overhaul or replace engine (See Note 1).				
47.	Check engine attach and mount attach bolts for cond. and torque, replace as required.		X	X	X
48.	Replace cowling and check for position of baffle seals and operation of cowl door fasteners.	X	X	X	X
49.	Check landing light for clearance to engine and operation.	X	X	X	X
50.	Check cowling for clearance to all engine components.	X	X	X	X
D.	CABIN GROUP				
1.	Inspect cabin entrance, doors and windows for damage and operation.	X	X	X	X

TABLE 3-1

INSPECTION REPORT

(Con't)

	INSPECTION TIME			
	50	100	500	1000
2. Check upholstery for tears.		X	X	X
3. Check seat and seat belt attachments.	X	X	X	X
4. Inspect seal belts for chafing and condition.	X	X	X	X
5. Check trim tab operation.	X	X	X	X
6. Check rudder pedals, springs & cables for security and condition.		X	X	X
7. Check parking brake operation.		X	X	X
8. Check control sticks for security and blockage at stick boots.	X	X	X	X
9. Inspect rudder cables and pulleys in baggage compartment for free operation and wear.		X	X	X
10. Check all lights for proper operation.	X	X	X	X
11. Check instruments, lines and attachments.		X	X	X
12. Check altimeter and pitot system.		X	X	X
13. Check operation of fuel valve.		X	X	X
14. Check operation of cabin heaters.		X	X	X
15. Check condition and operation of air vents.		X	X	X
16. Check fuel lines for chafing, cracks, or leaks.		X	X	X
17. Check all fuel line fittings for leaks and security.		X	X	X
18. Lubricate per Figure 2-6.		X	X	X
E. FUSELAGE AND EMPENNAGE GROUP				
1. Remove all inspection covers.		X	X	X
2. Remove elevator horn access cover.		X	X	X

TABLE 3-1

INSPECTION REPORT

(Con't)

	INSPECTION TIME			
	50	100	500	1000
3. Remove belly pan or open lower wraparound.		X	X	X
4. Remove aft baggage compartment panel.	X	X	X	X
5. Check security of battery and cables.		X	X	X
6. Check for signs of acid leakage.	X	X	X	X
7. Service battery (See Section 2-16).	X	X	X	X
8. Check bulkheads and stringers for damage.		X	X	X
9. Check antenna mounts and electrical wiring.		X	X	X
10. Drain rear fuel drain and check attaching lines for security and leakage.		X	X	X
11. Check vertical fin and rudder surfaces for damage.		X	X	X
12. Check rudder hinges, horn, stops and attachments for damage and operation.		X	X	X
13. Check rudder hinge bolts and bushings/bearings for excessive wear, replace as necessary.		X	X	X
14. Check elevator and stabilizer surfaces for damage.		X	X	X
15. Check elevator hinges, horn, stops and attachments for damage and operation.		X	X	X
16. Check elevator hinge bolts and bushings/bearings for excessive wear, replace as necessary.		X	X	X
17. Check stabilizer attach bolts for security.		X	X	X
18. Check tail brace wires for condition, tension and security.		X	X	X
19. Check elevator trim mechanism.		X	X	X
20. Check rudder, elevator and elevator trim cables, turnbuckles, guides and pulleys for security, wear and operation.		X	X	X

TABLE 3-1

INSPECTION REPORT

(Con't)

	INSPECTION TIME			
	50	100	500	1000
21. Check rudder, elevator and trim tab cables for proper tension. (See Table 5-1)		X	X	X
22. Check brake cylinders for security and operation.		X	X	X
23. Check brake reservoir and lines for chafing, cracks and leaks.		X	X	X
24. Check security of stick sockets, torque tube and cable attachments.		X	X	X
25. Inspect aileron cable bellcranks and links for security and operation.		X	X	X
26. Lubricate per Figure 2-6.		X	X	X
27. Check fuselage and tail surfaces for condition of fabric and paint.		X	X	X
28. Check fuselage frame for bent or corroded structural members.		X	X	X
29. Check fuselage and tail surface drain holes for opening.		X	X	X
30. Check rudder trim tab for security.		X	X	X
F. WING GROUP				
1. Remove all inspection covers on wings and ailerons.		X	X	X
2. Remove front and bottom wing gap fairings.		X	X	X
3. Check wings, ailerons and struts for damage.		X	X	X
4. Check wings, ailerons for condition of fabric and paint.		X	X	X
5. Check condition and security of wing hinge bolts.		X	X	X
6. Check condition and security of front and rear strut attach bolts.		X	X	X

TABLE 3-1

INSPECTION REPORT

(Con't)

		INSPECTION TIME			
		50	100	500	1000
7.	Check fuel tank outlet lines for security and leaks.		X	X	X
8.	Check fuel gauge for leakage.		X	X	X
9.	Check fuel tank for leaks and security.		X	X	X
10.	Check fuel tank cap and gaskets for sealing and condition.		X	X	X
11.	Check fuel caps for capacity and octane markings.		X	X	X
12.	Check security of struts.		X	X	X
13.	Check strut drain holes for opening and corrosion.		X	X	X
14.	Check wing and aileron trailing edge drain holes for opening.		X	X	X
15.	Check aileron movement for signs of chafing on adjacent parts.		X	X	X
16.	Check aileron cables, pulleys, guides and turnbuckles for security, wear and operation.		X	X	X
17.	Check aileron cables for proper tension.		X	X	X
18.	Check aileron hinge bolts and bearings for excessive wear and freedom of operation.		X	X	X
19.	Check aileron pushrods and rod end bearings for excessive wear and freedom of operation.		X	X	X
20.	Check aileron sectors for proper operation.		X	X	X
21.	Check wing spars for cracks, especially at butt and strut attach points.		X	X	X
22.	Check aileron travel and operation.		X	X	X
23.	Check operation of stall warning indicator (if installed).		X	X	X
24.	Check fuel vent system for obstructions, security and leaks.		X	X	X

TABLE 3-1

INSPECTION REPORT
(Con't)

	INSPECTION TIME			
	50	100	500	1000
25. Check pitot static mast and lines for security and damage.		X	X	X
26. Lubricate per Figure 2-6.		X	X	X
G. LANDING GEAR GROUP				
1. Check landing gear U-bolts and thru bolts for torque and condition. Replace as necessary.		X	X	X
2. Replace main landing gear thru bolts and U-bolts.			X	X
3. Check steel gear leg for nicks, scratches and corrosion.		X	X	X
4. Check exterior brake lines for security, cracks and leaks.		X	X	X
5. Bleed brakes (if necessary).		X	X	X
6. Check brake linings and discs for wear.		X	X	X
7. Visually check wheel alignment.		X	X	X
8. Check tires for cuts, wear and correct inflation pressure.	X	X	X	X
9. Remove wheels and inspect.		X	X	X
10. Check torque on wheel thru bolts.		X	X	X
11. Clean and repack wheel bearings (main and tail).		X	X	X
12. Check condition and operation of tail springs and tailwheel.		X	X	X
13. Check condition of tail spring wear block.		X	X	X
14. Check torque of tail spring thru bolt, "U" bracket and tailwheel attach bolt.		X	X	X
15. Check condition of wheel pants and brackets.	X	X	X	X

TABLE 3-1

INSPECTION REPORT

(Con't)

	INSPECTION TIME			
	50	100	500	1000
16. Lubricate per Figure 2-6.		X	X	X
17. Check gear and strut fairings (if equipped).		X	X	X
H. OPERATIONAL CHECK				
1. Fill fuel tanks and check for gauge operation.	X	X	X	X
2. Check oil level.	X	X	X	X
3. Start engine and warm to operating temperature.	X	X	X	X
4. Check fuel pressure (7KCAB only).	X	X	X	X
5. Check alternator output.	X	X	X	X
6. Check manifold pressure.	X	X	X	X
7. Check carburetor heat.	X	X	X	X
8. Check cabin heater operation.	X	X	X	X
9. Check magneto RPM drop variation.	X	X	X	X
10. Check throttle and mixture operation.	X	X	X	X
11. Check propeller smoothness.	X	X	X	X
12. Check engine idle speed and mixture setting.	X	X	X	X
13. Check all electrical accessories.	X	X	X	X
14. Check all flight controls for freedom of movement, surfaces move in proper direction.	X	X	X	X
I. GENERAL				
1. Aircraft conforms to FAA Approved Specifications.	X	X	X	X
2. All FAA Airworthiness Directives complied with.	X	X	X	X
3. All Bellanca Service Letters complied with.	X	X	X	X
4. Check all aircraft papers.	X	X	X	X

NOTE 1: Replace or overhaul as required or at engine overhaul. (For engine overhaul, refer to Lycoming Service Instruction No. 1009 and Lycoming Service Bulletin 240).

NOTE 2: Clean gascolator screen and fuel inlet screen in gasoline or acetone. Remove all dust, lint and dirt. Replace screen if damaged. Replace gasket or "O" rings if damaged. Resafety strainer body.

SECTION 4

STRUCTURE

		PAGE
4-1.	GENERAL	4-3
	REMOVAL	
4-2.	REMOVAL OF WING ASSEMBLY	4-3
4-3.	REMOVAL OF AILERON	4-4
4-4.	REMOVAL OF FLAP	4-4
4-5.	REMOVAL OF RUDDER	4-4
4-6.	REMOVAL OF ELEVATORS	4-5
4-7.	REMOVAL OF ELEVATOR TRIM TAB	4-5
4-8.	REMOVAL OF HORIZONTAL STABILIZER	4-5
4-9.	REMOVAL OF DOOR	4-6
4-10.	REMOVAL OF DOOR RELEASE MECHANISM	4-6
4-11.	REMOVAL OF WINDSHIELD	4-6
4-12.	REMOVAL OF LEFT FRONT WINDOW ASSEMBLY	4-6
4-13.	REMOVAL OF LEFT AND RIGHT REAR WINDOWS	4-6
4-14.	REMOVAL OF GREENHOUSE ROOF	4-7
	INSTALLATION	
4-15.	INSTALLATION OF WING ASSEMBLY	4-9
4-16.	INSTALLATION OF AILERON	4-12
4-17.	INSTALLATION OF FLAP	4-12
4-18.	WING RIGGING INSTRUCTION	4-14
4-19.	INSTALLATION OF FUSELAGE WING GAP FAIRINGS	4-16
4-20.	INSTALLATION OF STABILIZERS	4-16
4-21.	INSTALLATION OF ELEVATORS	4-17

SECTION 4

STRUCTURE
(Con't)

		PAGE
4-22.	INSTALLATION OF ELEVATOR TRIM TAB	4-17
4-23.	INSTALLATION OF RUDDER	4-17
4-24.	INSTALLATION OF DOOR RELEASE MECHANISM	4-19
4-25.	INSTALLATION OF DOOR	4-19
4-26.	INSTALLATION OF WINDSHIELD	4-19
4-27.	INSTALLATION OF LEFT FRONT WINDOW ASSEMBLY	4-20
4-28.	INSTALLATION OF LEFT AND RIGHT REAR WINDOWS	4-21
4-29.	INSTALLATION OF GREENHOUSE ROOF	4-21

SECTION 4

STRUCTURE

4-1. GENERAL

Minor repairs such as patching the dacron, welding, wing rib repair, etc. may be made in accordance with regulations set forth in FAA Advisory Circular 43.13-1. Note: The assembly, disassembly, rigging and adjustment of component parts of various structures is found in Section 5.

4-2. REMOVAL OF WING ASSEMBLY

a. Drain all fuel from entire system

b. Disconnect the aileron cables at the turnbuckles located under cable covers at forward edge of rear windows. It will be necessary to remove cable covers to expose turnbuckles.

c. Disconnect aileron balance cable at turnbuckle located above zipper opening in rear cabin headliner.

d. Remove all wing-fuselage gap fairings and fairing adjustment bracket.

e. Disconnect electrical wires, fuel lines, vent lines, pitot system lines (right only) in wing-fuselage gap area. Remove cotter pin from aileron cable pulley and pull cable thru from fuselage. Loosen balance cable fairleads to allow removal of cable from fuselage. Identify cables to assure proper reconnection. Disconnect flap return spring forward end and flap push rod aft end. (7GCBC only)

f. Disconnect pitot and static lines from the pitot mast at front jury strut upper attachment.

g. Remove jury struts and spreader bar.

h. Support wing tip and remove rear main strut.

i. Remove nuts from bolts on main wing strut and from wing spar-fuselage connection bolts.

j. Lift slightly on wing outboard panel and remove front strut.

k. Support entire wing panel and remove front and rear spar-fuselage attach bolts. Remove wing panel. Note: Wing panel weight is approximately 120 pounds. Store panel carefully to avoid concentrated loading and damage.

l. Remove other wing panel in identical manner.

4-3. REMOVAL OF AILERONS

a. Disconnect aileron push rod at aileron.

b. Remove thru aileron hinge bolts keeping track of special washers.

4-4. REMOVAL OF FLAPS

a. Remove lower aft gap fairing.

b. Disconnect flap return spring.

c. Disconnect flap push rod at flap.

d. Remove thru hinge bolts.

4-5. REMOVAL OF RUDDER

a. Pull ground and tail navigation light wire thru grommet on fuselage. Disconnect wires at taped terminals.

b. Disconnect tail wheel steering springs at tail wheel horn.

c. Disconnect rudder cables at rudder control horn. Hold rudder to side to release cable tension when disconnecting cable.

d. Remove rudder hinge pins.

e. Remove rudder.

4-6. REMOVAL OF ELEVATORS

a. Remove elevator horn access cover.

b. Disconnect elevator cables from elevator horn. Identify up and down cables to assure proper reconnection. Wire or tie cables to rear structure to prevent falling into fuselage belly.

c. Disconnect trim tab cables at tab horn. Remove turnbuckles from swedged cable fittings.

d. Remove bolt and bushing, connect right and left elevators.

e. Remove left elevator hinge pins. Remove left elevator by first lifting elevator up free of stabilizer and then pulling outboard to disengage stud from right elevator.

f. Remove large washer from connecting stud.

g. Remove right elevator hinge pins. Remove right elevator.

4-7. REMOVAL OF ELEVATOR TRIM TAB

a. Disconnect tab cables at tab horn.

b. Remove screws holding tab to elevator frame and remove tab.

4-8. REMOVAL OF STABILIZERS

a. Remove elevators.

b. Remove nut from outboard brace wire attach bolt. Remove bolt.

c. Remove lower brace wire attach pin at fuselage.

d. Remove upper brace wire attach pin on fin.

e. Remove bolt at inboard leading edge of stabilizer.

f. Working outboard end of stabilizer fore and aft and pulling outboard at the same time remove stabilizer.

4-9. REMOVAL OF DOOR

a. Remove door by actuating quick release mechanism.

4-10. REMOVAL OF DOOR QUICK RELEASE MECHANISM

a. Remove handle.

b. Remove cam and pin mechanism.

4-11. REMOVAL OF WINDSHIELD

a. Remove wing-fuselage forward gap covers.

b. Remove screws from side and top retainer strips at rear edges of retainer.

c. Remove windshield.

4-12. REMOVAL OF LEFT FRONT WINDOW ASSEMBLY

a. Remove scissors stop arm assembly connection at window by drilling off rivet head.

b. Remove window assembly by drilling heads off rivets on window side of hinge.

4-13. REMOVAL OF LEFT AND RIGHT REAR WINDOWS

a. Remove forward retainer strips.

b. Remove windows by pulling window forward and bowing forward edge slightly to pass out of window channels at forward edge.

4-14. REMOVAL OF GREENHOUSE ROOF WINDOW (If Installed)

a. Remove wing-fuselage top and forward gap fairings.

b. Remove top windshield retainer strip.

c. Remove 3" fabric tape strip from window rear edge.

d. Remove rear edge retaining screws. Nuts are accessible thru forward zipper opening in headliner.

e. Remove window side fabric tapes.

f. Remove window.

5. Front strut fuselage attach - AN6 bolt - 3/8" diameter (Do not tighten and safety rear strut lower attach at this time.)

f. Identify aileron actuating cable (located on forward side of aileron bellcrank) and pass it over pulley and attach to side adjusting turnbuckle.

g. Install cable guard cotter pin in pulley lugs.

h. Connect aileron balance cable to center overhead turnbuckle after passing thru fairlead blocks. Tighten bolts on fairlead blocks.

i. Connect forward and rear fuel supply line to fuel tank outlets and tighten.

j. Connect pitot and static lines at wing butt to fuselage pitot and static lines and clamp with safety wire.

k. Connect wing light electrical wires.

l. Connect fuselage crossover fuel vent line to fuel tank vent outlets.

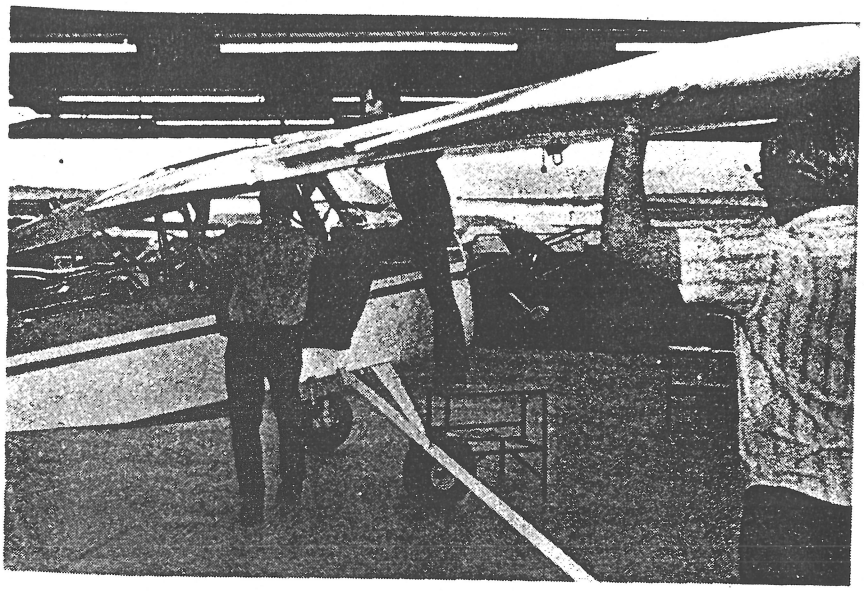

FIGURE 4-1. INSTALLING WING PANELS

4-15. INSTALLATION OF WING ASSEMBLY (Refer to Figure 4-1 & 4-2)

a. Attach front main strut to fuselage fitting. (Do not tighten nut at this time.)

b. Lift wing panel into position and attach front and rear spar to fuselage.

c. Attach front main strut to wing and rear strut at wing and at lower front strut fitting. (Support wing at tip until both struts are attached.)

d. Install jury struts and tighten all attachments. (Refer to Figure 4-2)

e. Tighten attach bolts and safety nut.

1. Front spar fuselage attach - AN6 bolt - 3/8" diameter
2. Rear spar fuselage attach - AN4 bolt - 1/4" diameter
3. Front strut wing attach - AN5 bolt - 5/16" diameter
4. Rear strut wing attach - AN6 bolt - 3/8" diameter

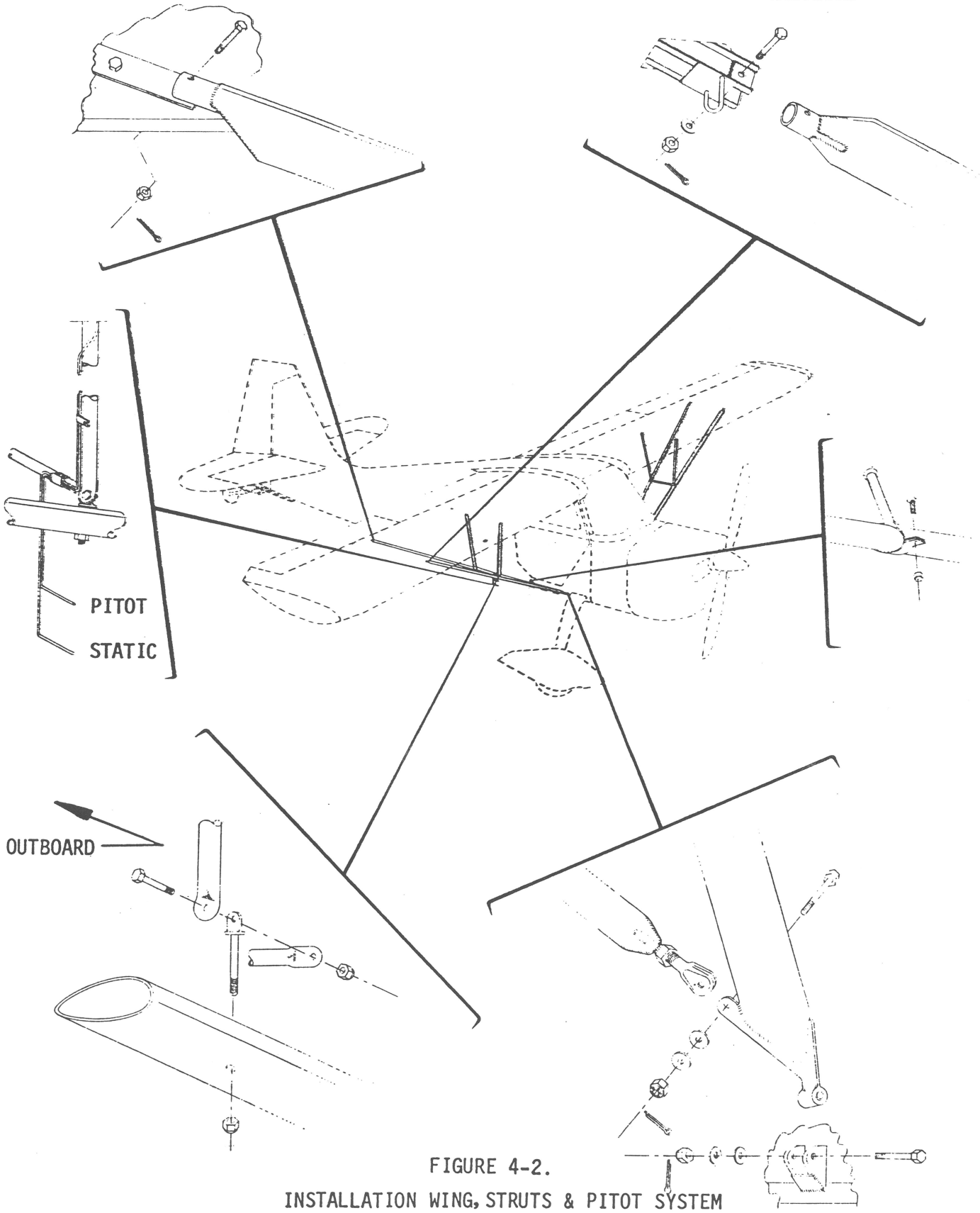

FIGURE 4-2.
INSTALLATION WING, STRUTS & PITOT SYSTEM

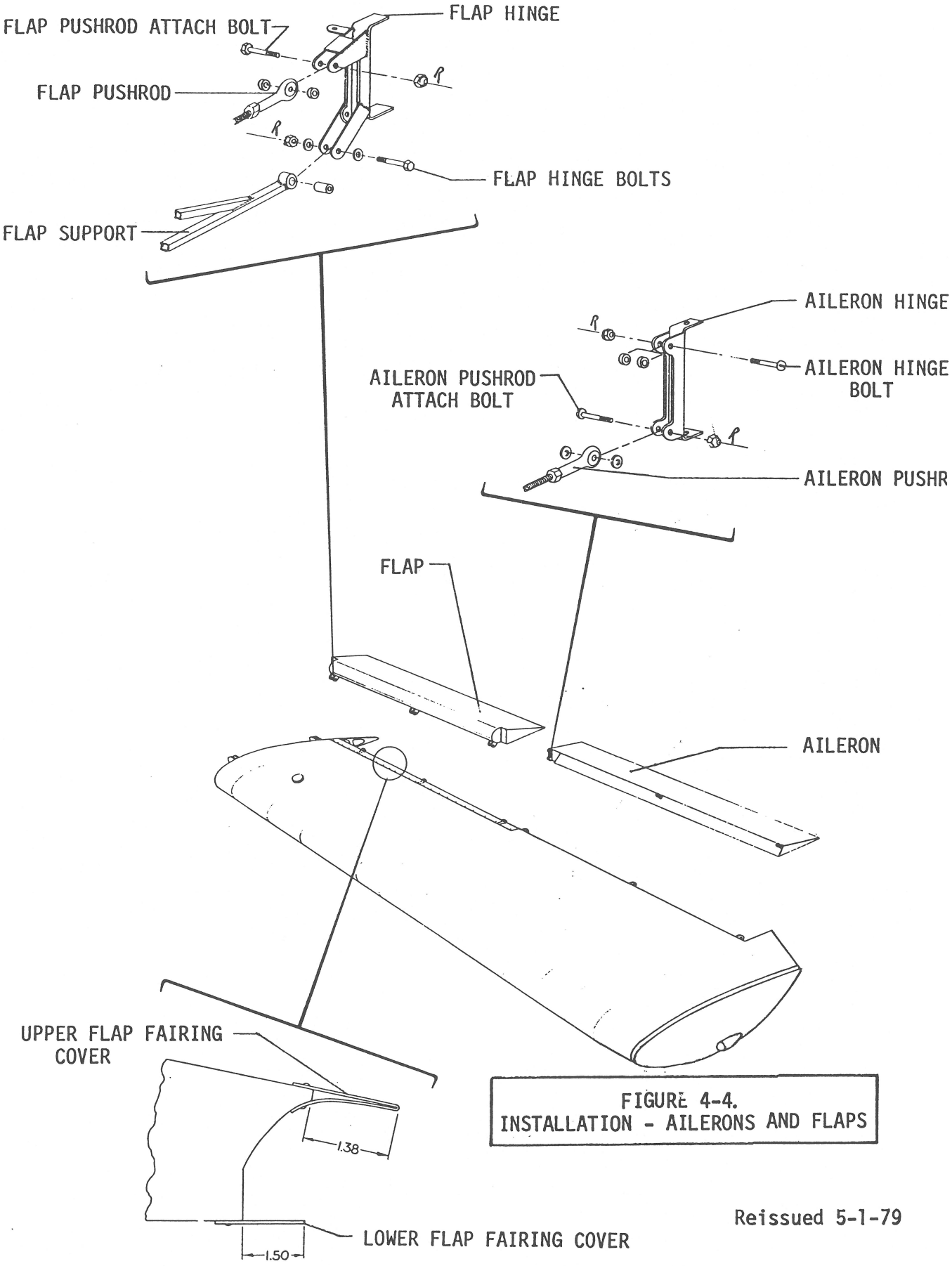

FIGURE 4-4.
INSTALLATION - AILERONS AND FLAPS

Note: All main structure attach bolts are installed with bolt head either forward or up. - Except front wing spar fuselage attach bolt.

m. Install pitot mast (right wing only) and connect pitot and static lines to pitot mast. Note: Check for proper line connection and system leaks. (Refer to Figure 4-2)

4-16. INSTALLATION OF AILERON (Refer to Figure 4-4)

a. Attach aileron to aileron hinges, tighten and safety hinge bolts.

b. Attach aileron pushrod. (Do not tighten or safety attach bolt.)

c. Refer to Section 5 for rigging.

4-17. INSTALLATION OF FLAP - 7GCBC ONLY (Refer to Figure 4-4)

a. Attach flap at flap hinges, tighten and safety hinge bolts.

b. Connect flap pushrod from torque tube to flap. (Do not tighten and safety until after rigging.)

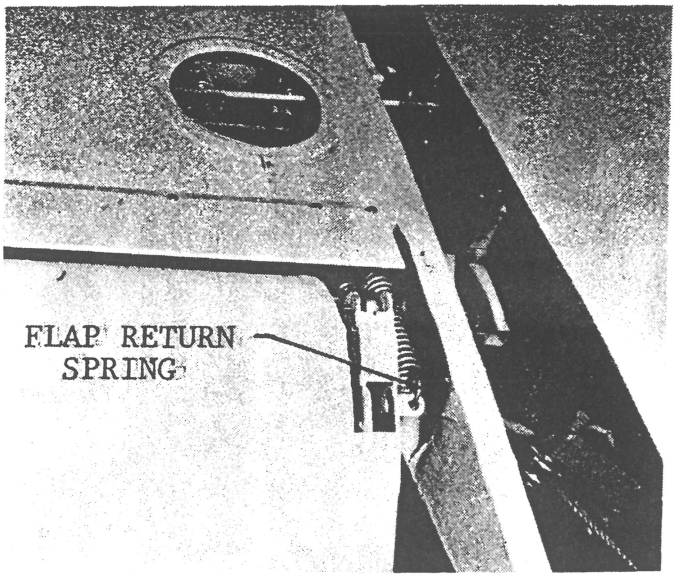

FIGURE 4-5. CONNECTING FLAP RETURN SPRING

c. Connect flap return spring from rear spar attach to flap attach. (Refer to Figure 4-5)

d. Installation of flap gap fairing covers. (Refer to Figure 4-4)

e. Refer to Section 5 for rigging.

4-18. WING RIGGING INSTRUCTION (Refer to Figure 4-6, 4-7 & 4-8)

The plus 2° angle of dihedral is fixed by the length of the front strut. The plus 1° angle of incidence is fixed in the manufacture of the airplane at the wing root fittings on the fuselage. The angle of incidence at the rib nearest the strut point attachment fitting of the wing may be corrected to agree with the angle of incidence at the root by adjusting the screw adjustment at the lower end of the rear strut where it attaches to the front strut.

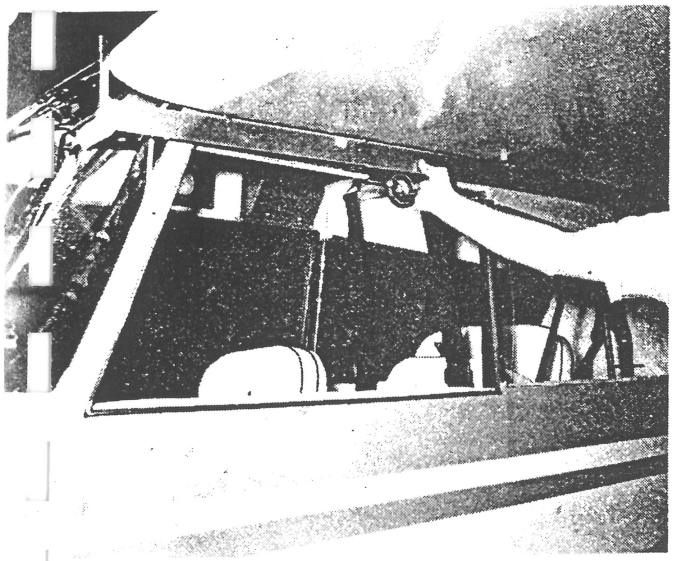

FIGURE 4-6.
MEASUREMENT OF INCIDENCE AT WING BUTT

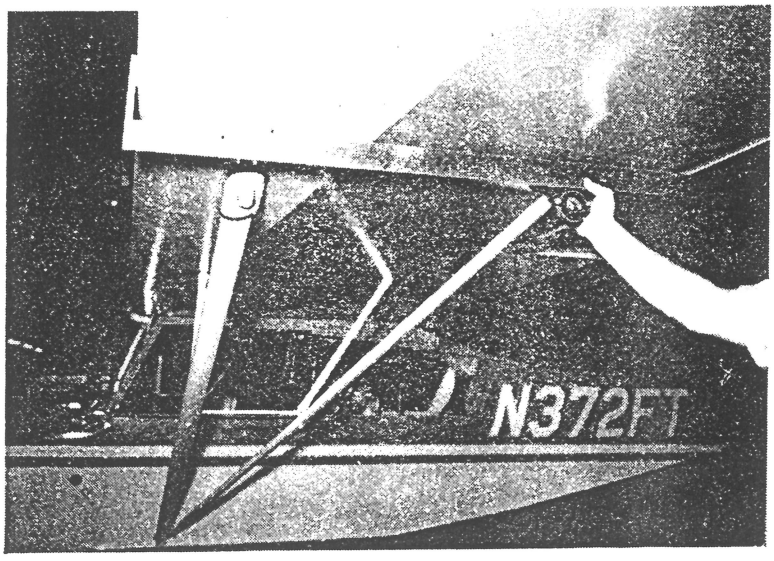

FIGURE 4-7.
MEASUREMENT OF INCIDENCE AT STRUT ATTACH

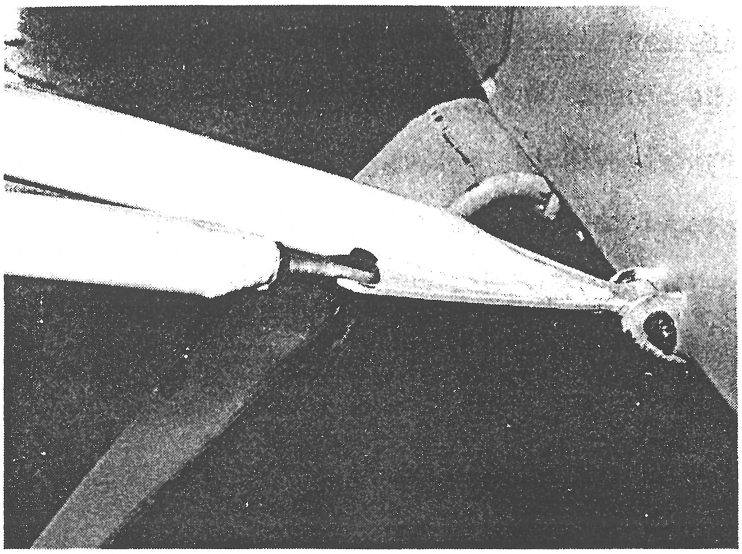

FIGURE 4-8.
VIEW OF REAR STRUT ADJUSTING SCREW

This provides zero washout. If the airplane seems to have a tendency toward wing heaviness, the necessary wash in or wash out may be secured by adjusting the rear strut at its lower attachment point. Wash out (reduce tip incidence) the high (light) wing one degree; then, if necessary, wash in the low (heavy) wing.

4-19. INSTALLATION OF FUSELAGE WING GAP FAIRINGS (Refer to Figure 4-9)

a. Install lower rear fairing.

b. Install lower forward fairing.

c. Install top fairing and tighten at forward adjustment screw.

d. Install front fairing.

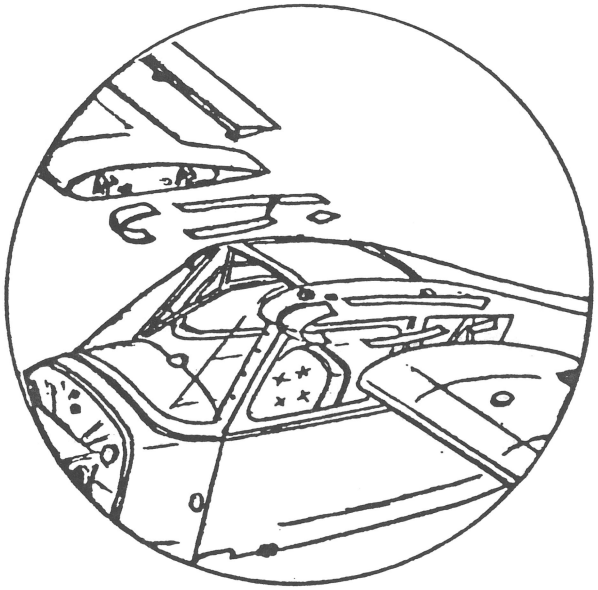

FIGURE 4-9.
GAP COVER INSTALLATION

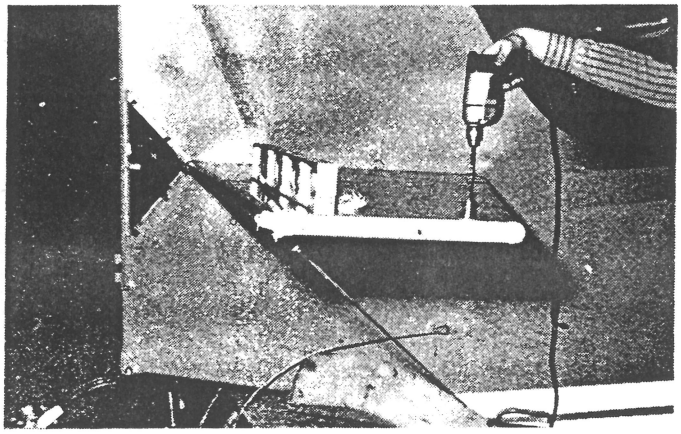

FIGURE 4-10.
POSITIONING, LEVELING & ATTACHING STABILIZER

4-20. INSTALLATION OF STABILIZERS (Refer to Figure 4-10)

a. Mate stabilizer spars with fuselage connecting members. Rear spar must be against stop on fuselage.

b. Install top and bottom brace wire. (Do not tighten at this time)

c. Align stabilizers using string along hinges. (Refer to Figure 4-10)

d. Install and safety front spar attach bolt at fuselage. Note: If installing new stabilizer, attach hole in stabilizer must be enlarged to 3/16" diameter.

e. Once stabilizer is adjusted and leveled, tighten top and bottom brace wire to 320 to 420 pounds of tension (Measure tension with wire tensiometer) or torque wire to 18-20 inch pounds with lubricated threads.

4-21. INSTALLATION OF ELEVATORS (Refer to Figure 4-11)

a. Install right elevator.

b. Attach elevator control cables to elevator horn. Note: Before attaching elevator control cables, trace the cables thru the fuselage and check to assure that the cables are not crossed or improperly routed.

c. Install left elevator using sufficient washers on left elevator spar engagement pin to prevent hinge binding.

d. Connect left elevator arm to right elevator horn using proper hardware. (Refer to Figure 4-11)

e. Safety all connections. (See Section 5 for rigging.)

4-22. INSTALLATION OF ELEVATOR TRIM TAB (Refer to Figure 4-11)

a. Install tab by attaching four forward mounting screws at elevator. If elevator is new, match drill elevator tube in center from tab hinge.

4-23. INSTALLATION OF RUDDER (Refer to Figure 4-11)

a. Position rudder and pin hinges. Safety the connections.

b. Attach rudder cables making sure that cables are properly routed.

c. Connect steering horn-to-tail wheel horn springs.

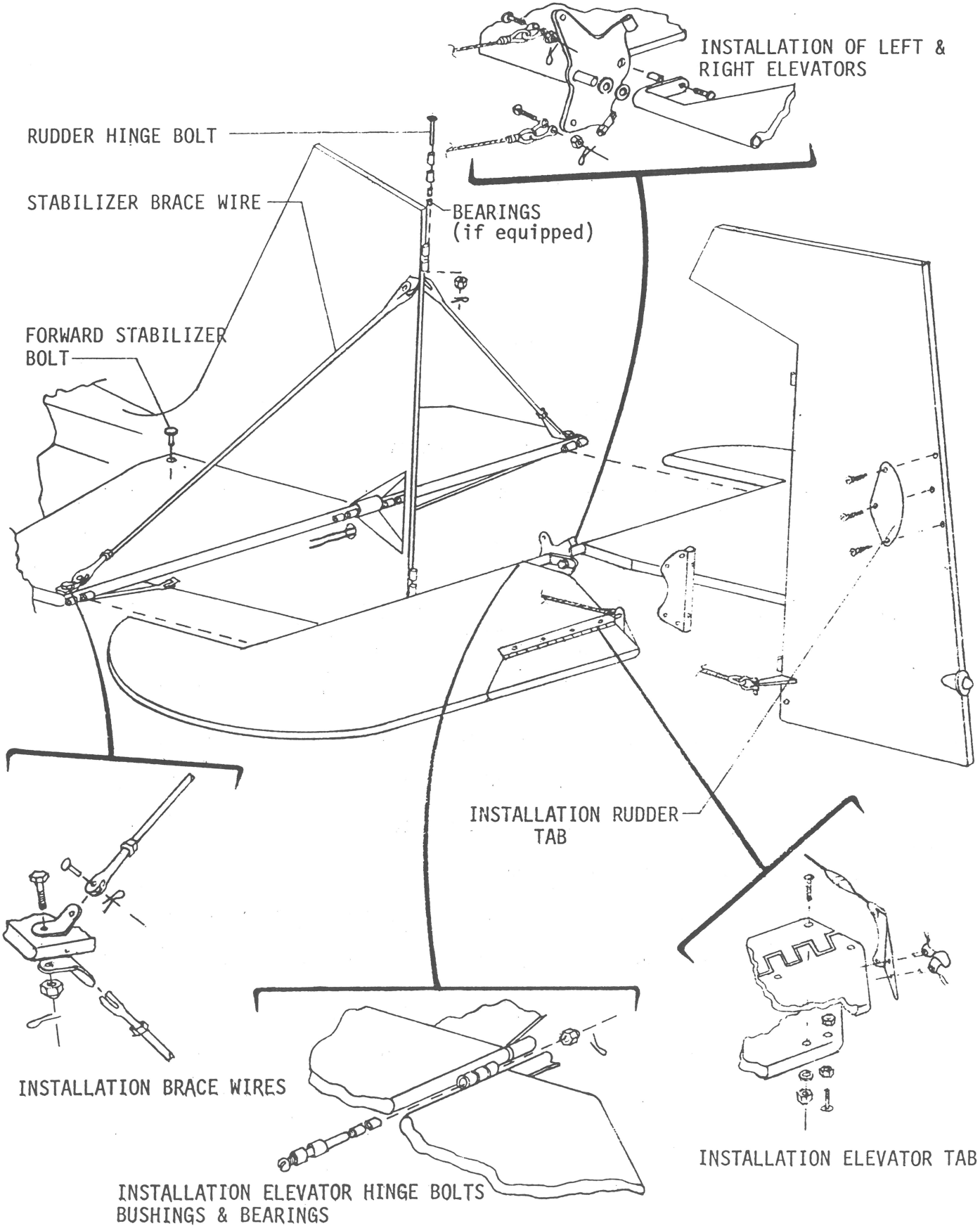

FIGURE 4-11. INSTALLATION - TAIL SURFACES

d. If steering horn or rudder is new, match drill thru rudder and horn (2 places) with horn and rudder surface at right angles to each other.

e. Connect electrical wires.

f. Safety all connections. (See Section 5 for rigging)

4-24. INSTALLATION OF DOOR RELEASE MECHANISM

a. Install in reverse order of removal.

4-25. INSTALLATION OF DOOR

a. Position door in opening and on hinges.

b. Install pin mechanism and cotter pin.

c. Install pull pin.

4-26. INSTALLATION OF WINDSHIELD (Refer to Figure 4-12)

a. Install side retainers and rubber strips on windshield.

b. Install in reverse order of removal. Note: Use extreme caution when placing windshield against mating surfaces to avoid cracking of windhsield glass. Also the glass will scratch easily if touched by a sharp metal object. Do not force windshield in any manner.

c. If it is necessary to install new bottom wraparound retainer, position retainer approximately in center and begin attaching at center of airplane moving toward each side with attach rivets. Retainer may then be trimmed at rear edges to match side retainers. Using a soft rubber mallet, lightly tap top of retainer against windshield to seal. Caulking compound and rubber should be placed at bottom of windshield before

attaching bottom retainer.

d. Place a 3" strip of fabric tape over top rear edge of windshield lapping onto greenhouse window (if equipped) or aircraft fabric. Glue down.

e. Attach top retainer using proper screws thru retainer and windshield and into rubber nuts on bracket.

f. Upper retainer must overlap greenhouse roof by at least one-half inch and be against roof and windhsield throughout full retainer length.

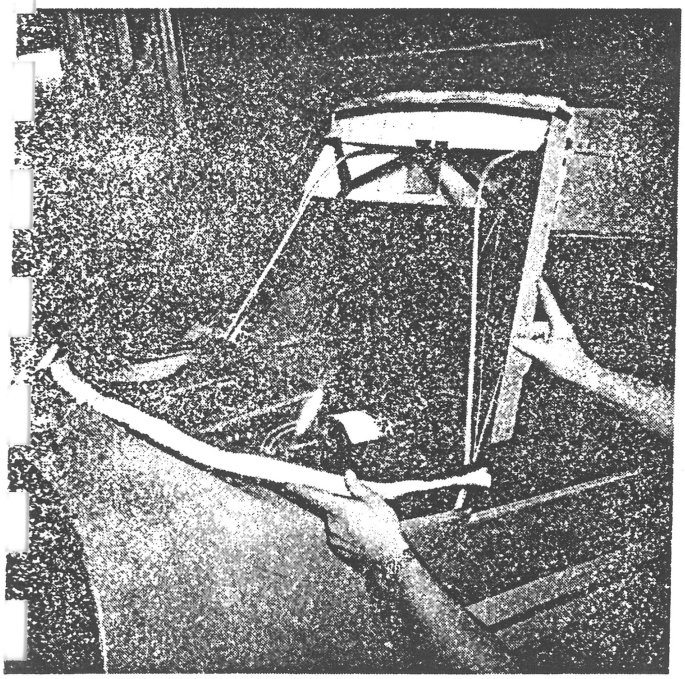

FIGURE 4-12.
INSTALLING WINDSHIELD

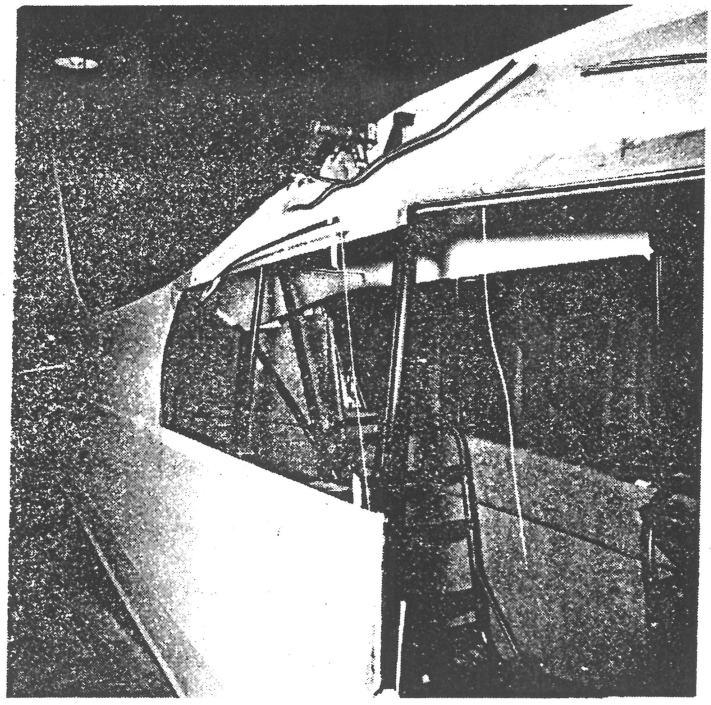

FIGURE 4-13.
INSTALLING REAR WINDOW

4-27. INSTALLATION OF LEFT FRONT WINDOW ASSEMBLY

a. Place window in position such that adequate clearance around entire inside portion is obtained. It may be necessary to

trim around outside flange edges with a sandpaper board to achieve best fit.

b. Match drill thru window from hinges with window in correct position. Attach window to hinges with appropriate fasteners.

c. With scissors hinge center pivot up and parallel to forward window channel, close window and mark position on window directly aft of hinge rivet on forward channel. Open window and drill for window hinge attachment. Attach hinge to window.

d. Install and set latch striker plate to maintain closed window.

4-28. INSTALLATION OF LEFT AND RIGHT REAR WINDOWS (Refer to Figure 4-13)

a. Check for any obstructions in window channels.

b. Install window rubber seal strip around window edges. Use masking tape to hold rubber on window temporarily.

c. Using petroleum jelly or grease wiped lightly over outside rubber seals, slide window aft into lower channel. Before window reaches extreme aft position, deform window slightly to allow passage into upper channel. Lightly slide window aft to rear channel stop.

d. Install interior upper window retainer angle. Position aft bulkhead top panel against window.

4-29. INSTALLATION OF GREENHOUSE ROOF

a. Position roof window flush at forward wood former and match holes at rear window edge with rear retainer.

b. Install rear retaining screws and nuts.

c. Install 4" fabric tape over window rear edge and aft main fabric.

d. Install 3" fabric side tapes - glue to roof and glue or staple to wood former sides.

e. Install top windshield retainer being sure that retainer overlaps roof by at least one-half inch.

SECTION 5

SURFACE CONTROLS AND RIGGING

		PAGE
5-1.	GENERAL	5-2
5-2.	REMOVAL OF TORQUE TUBE ASSEMBLY	5-2
5-3.	REMOVAL OF SIDE AILERON SECTORS	5-4
5-4.	REMOVAL OF AILERON ACTUATING SECTOR IN WING	5-4
5-5.	REMOVAL OF ELEVATOR CABLES	5-4
5-6.	REMOVAL OF ELEVATOR TRIM TAB CONTROL	5-6
5-7.	REMOVAL OF RUDDER PEDAL ASSEMBLY	5-6
5-8.	REMOVAL OF FLAP HANDLE ASSEMBLY	5-6
5-9.	REMOVAL OF TORQUE TUBE ASSEMBLY	5-7
5-10.	REMOVAL OF FLAP CONTROL CABLES	5-7
5-11.	INSTALLATION OF FLAP TORQUE TUBE ASSEMBLY	5-9
5-12.	INSTALLATION FLAP CABLES	5-9
5-13.	INSTALLATION OF FLAP HANDLE	5-9
5-14.	RIGGING OF FLAP CONTROL SYSTEM	5-9
5-15.	INSTALLATION OF AILERON CONTROLS	5-11
5-16.	INSTALLATION OF ELEVATOR CONTROL SYSTEM AND RIGGING	5-14
5-17.	INSTALLATION OF RUDDER CONTROLS	5-16
5-18.	INSTALLATION OF TRIM TAB CONTROL SYSTEM AND RIGGING	5-17

SECTION 5

SURFACE CONTROLS AND RIGGING

5-1. GENERAL

This section comprises information for removal, installation, rigging and adjustment of surface controls and their related components for the Citabria. For the removal and installation of control surfaces, refer to Section 4. Note: When removing control cables, attach a line and identify each cable to facilitate installation.

5-2. REMOVAL OF TORQUE TUBE ASSEMBLY (See Figure 5-1)

a. If it becomes necessary to remove the aileron torque tube assembly, the following procedure should be used:
   1. Open the lower wraparound cowl or remove belly pan.
   2. Remove belly inspection covers.

b. Remove control sticks, boots, seats, carpet and aft floor boards.

c. Disconnect elevator control cables at forward cable attachments.

d. Disconnect aileron connecting links at torque tube bellcrank.

e. Remove bearing block bolts from both end bearings.

f. Remove torque tube assembly thru aft floor area.

g. Check all components for worn or damaged parts. Replace as necessary.

FIGURE 5-1.

ELEVATOR AND AILERON CONTROL SYSTEM

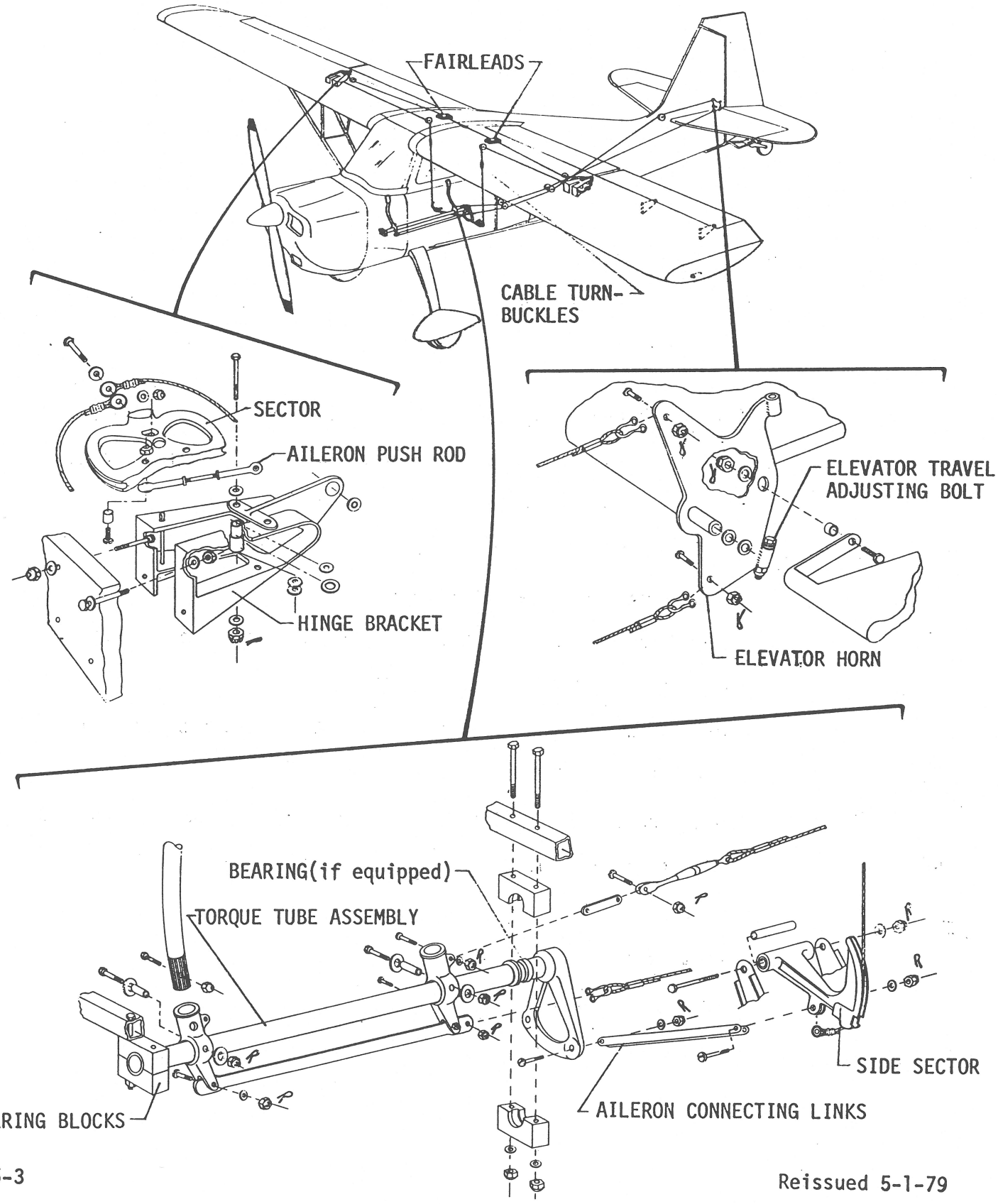

5-3. REMOVAL OF SIDE AILERON SECTORS (See Figure 5-1)

a. Remove attaching screws from sector covers.

b. Slide covers aft on rudder cable.

c. Remove main hinge bolt.

d. Remove sector assembly.

e. Check all component parts for worn or damaged parts. Replace as necessary.

5-4. REMOVAL OF AILERON ACTUATING SECTOR IN WING (See Figure 5-1)

a. Remove aileron.

b. Disconnect balance cable turnbuckle located thru zipper in rear headliner.

c. Disconnect the actuating cable beneath the side aileron cable covers.

d. Remove wing-fuselage fairing covers and remove cotter pin just above aileron cable pulley. Loosen balance cable fair-lead nuts. Pass cables out of fuselage into wing-fuselage gap area.

e. Cut fabric sufficiently to loosen adjacent rib and to enable removal of aileron sector and hinge bracket assembly.

f. Remove hinge bracket spar bolts. Remove hinge bracket assembly.

g. Check all components for worn or damaged parts. Replace as necessary.

5-5. REMOVAL OF ELEVATOR CABLES (See Figure 5-1)

a. Disconnect cables at rear stick socket.

b. Disconnect cables at elevator horn on elevator.

FIGURE 5-2.
RUDDER & TRIM TAB
CONTROL SYSTEM

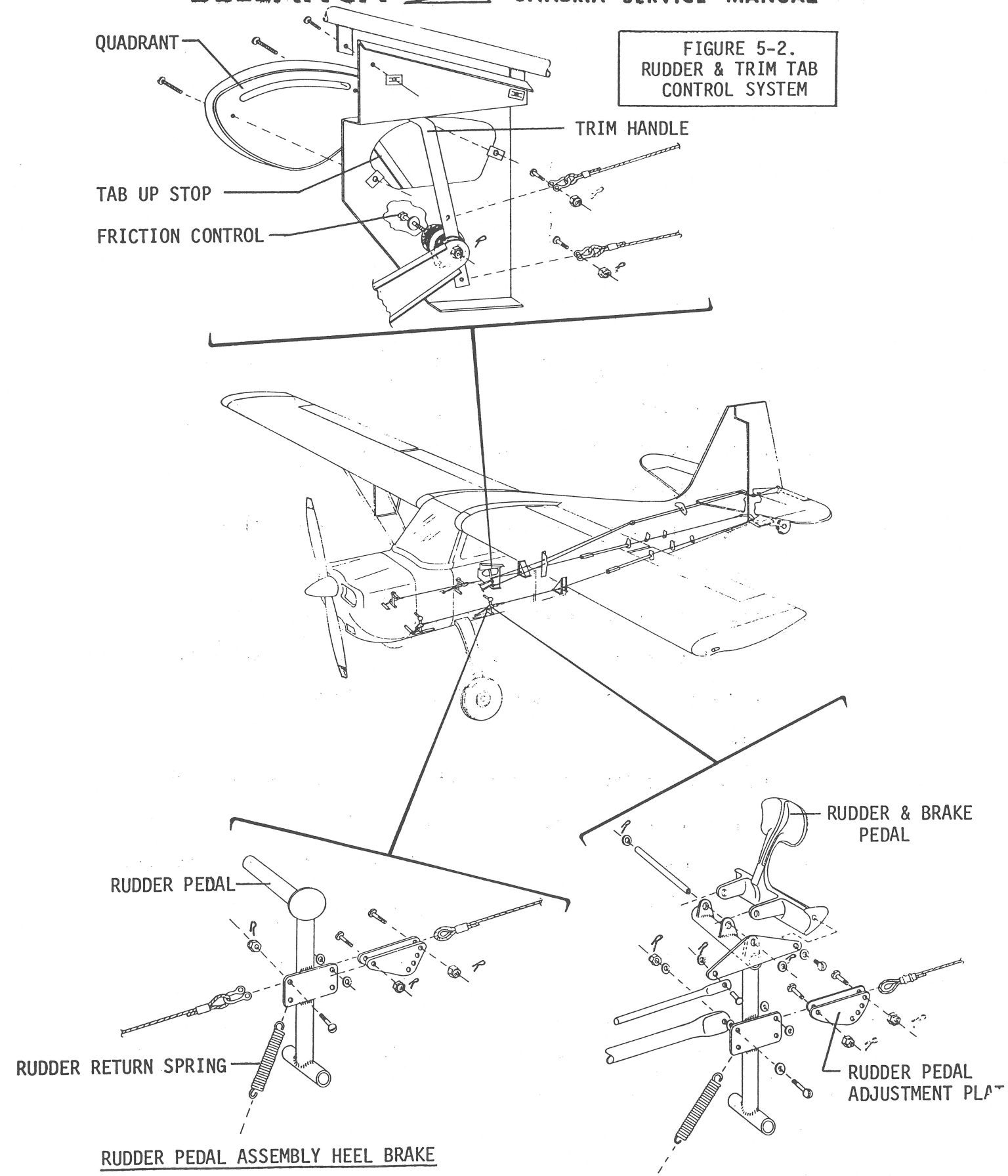

RUDDER PEDAL ASSEMBLY HEEL BRAKE

RUDDER PEDAL ASSEMBLY TOE BRAKE

c. Remove all elevator cable pulleys in fuselage.

d. Check all parts for wear and damage. Replace as necessary.

Note: All alum. pulleys in elevator system should be replaced with larger diameter bearing type pulleys.

5-6. REMOVAL OF ELEVATOR TRIM TAB CONTROL (See Figure 5-2)

a. Remove top left side panel and loosen lower side panel.

b. Remove cotter pin from handle hinge bolt and hinge bolt.

c. Remove handle and friction control parts. Note position of washers, grommets and leathers for reinstallation purposes.

d. Remove trim tab cables at handle connections.

e. Disconnect trim tab cables at rear turnbuckles.

f. Remove trim cable pulleys. Note position of pulleys, washers and guard for reassembly.

g. Remove trim cables forward thru fairlead and grommets.

h. Check all parts for wear and damage. Replace as necessary.

5-7. REMOVAL OF RUDDER PEDAL ASSEMBLY (See Figure 5-2)

a. Disconnect rudder pedal springs front and rear.

b. Disconnect rudder cables at rear rudder pedal and rudder.

c. Remove guards and pulleys in baggage compartment.

d. Remove bushings in rudder pedals.

e. Remove rudder assembly. Check all parts for wear and damage. Replace as necessary.

5-8. REMOVAL OF FLAP HANDLE ASSEMBLY (See Figure 5-3)

a. Remove flap handle boot.

b. Disconnect cable turnbuckle aft of handle assembly.

c. Remove main handle attach bolt and remove flap handle.

d. Inspect catch plate attachment and catch plate for wear and damage.

e. Inspect security of stops.

f. Inspect all parts for wear or damage. Replace as necessary.

5-9. REMOVAL OF FLAP TORQUE TUBE ASSEMBLY

Note: Inspection of this assembly can be accomplished without removal; however, if it is necessary to replace, follow below procedure.

a. Disconnect pushrod at flap hinge.

b. Remove flap return springs.

c. Disconnect flap cables at torque tube arm.

d. Slit fabric across top of aircraft just above torque tube. Cut thru wooden formers just over tube.

e. Remove bearing block bolts noting left side stop adjustment washer and bushing location.

f. Remove torque tube.

g. Check torque tube assembly for worn or damaged components.

5-10. REMOVAL OF FLAP CONTROL CABLES

a. Remove all pulleys noting position of bushing and washers. Do not move extension spring cable attachment clips located on aft main cable.

b. Inspect for worn bushings, bearings, pulleys, pins and cable. Replace as necessary.

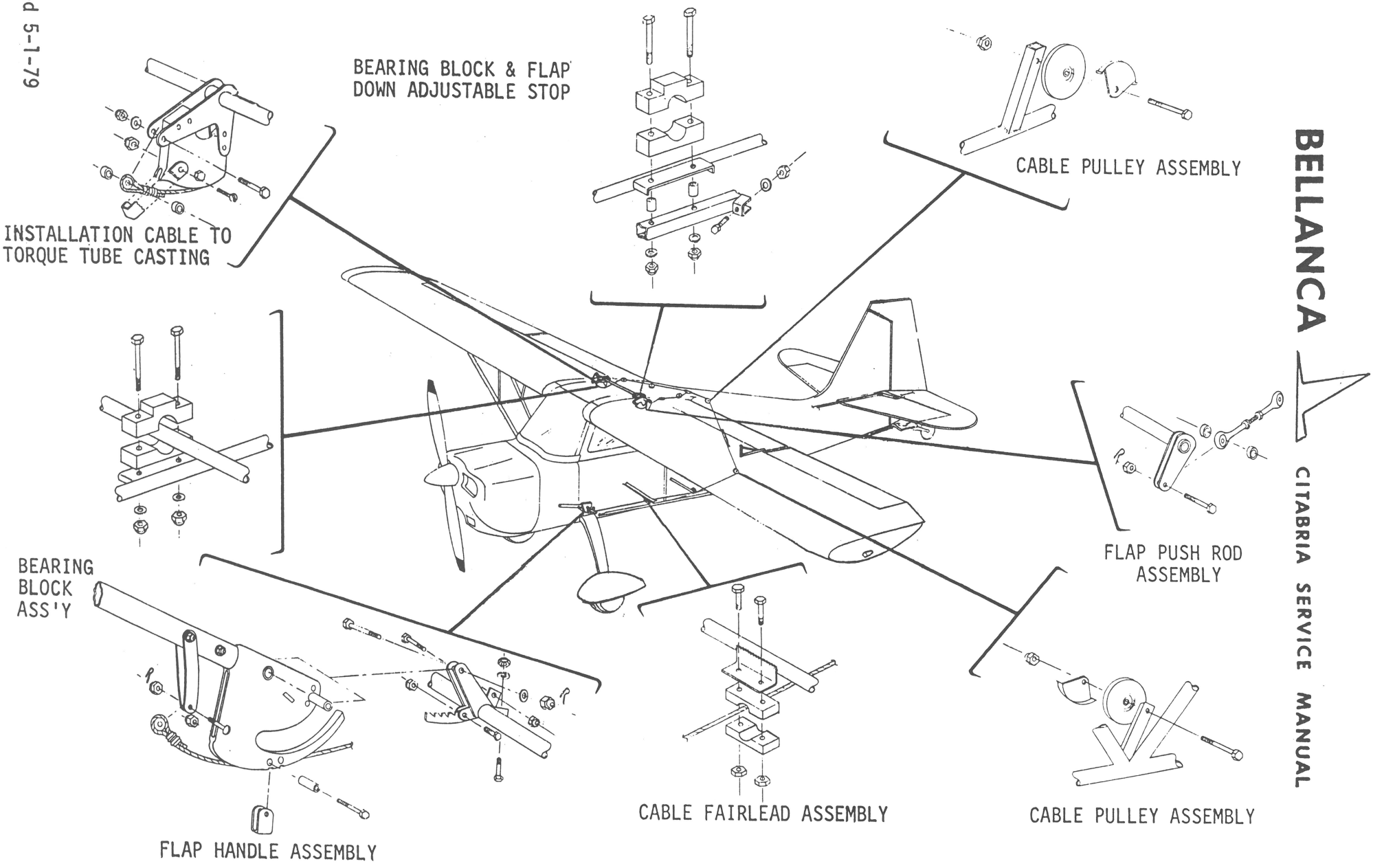

FIGURE 5-3. FLAP CONTROL SYSTEM

5-11. INSTALLATION OF FLAP TORQUE TUBE ASSEMBLY

a. Install in reverse order of removal.

b. Check for binding and accessive play.

5-12. INSTALLATION OF FLAP CABLES

Note: Pulley attachments are accessible thru wing gap covers, headliner aft bulkhead and belly inspection covers.

a. Install cable assembly by passing individual torque tube cables over upper pulleys and connecting to torque tube arm.

b. Pass main flap cable aft and down thru large pulleys and thru lower fairlead to turnbuckle.

c. Install and safety all pulleys.

d. Connect flap return spring and connect flap push rod to flap.

5-13. INSTALLATION OF FLAP HANDLE

a. Install flap handle in reverse order of removal. Connect cable to main cable at turnbuckle.

5-14. RIGGING OF FLAP CONTROL SYSTEM (See Figure 5-4)

a. With flap in line with ailerons, tip rib and butt rib, left up stop on the torque tube bellcrank should be against adjusting stop tube. (See Figure 5-4) Adjust push rods on each flap to agree.

b. Flaps should be positioned with down travel per Table 5-1. Measure on top or bottom flap surface per Figure 5-5.

Note: Measuring protractor should be placed on solid surface without setting on any protrusions (rivets, tape, etc.) Set in up position and measure travel to down position (angle change).

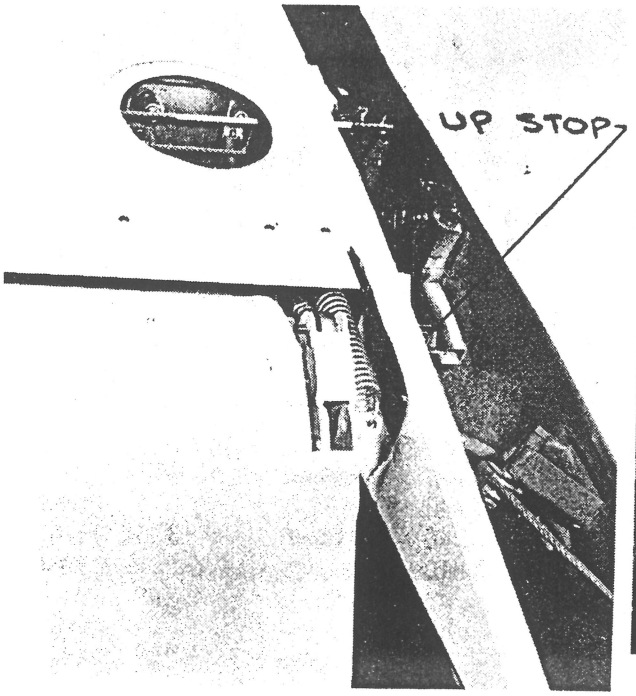

FIGURE 5-4.
FLAP RETURN SPRING AND
ADJUSTMENTS-LEFT WING

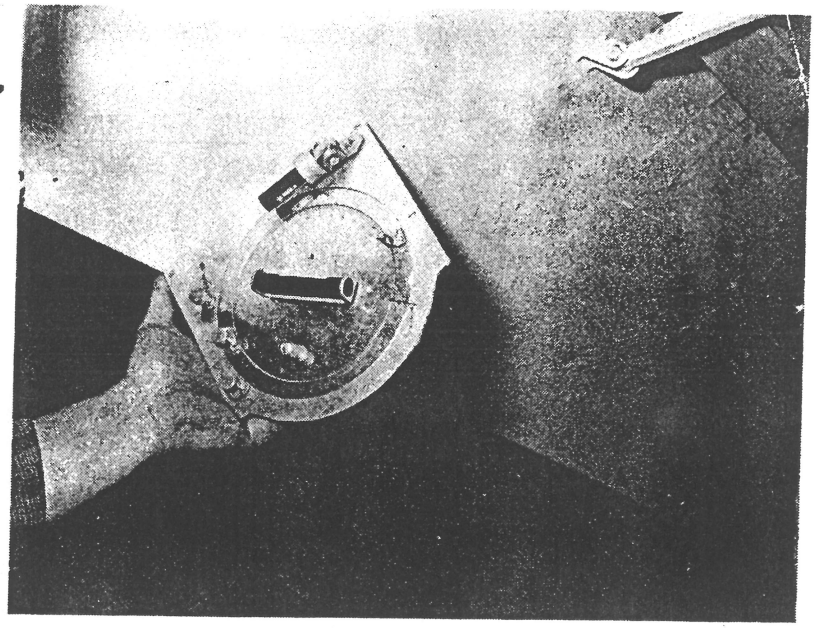

FIGURE 5-5.
MEASURING FLAP DOWN TRAVEL

c. At correct down position, the stop on bellcrank should contact stop tube adjustable bolt. Position stop bolt to correct if not per requirements.

d. With flap handle in 0° position, tighten turnbuckle enough such that flap surface just begins to move down.

e. Check full travel by positioning handle in 35° position. Remeasure flap deflection. Note: If full flap deflection cannot be obtained, move the cable-to-cable extension spring clips toward each other slightly. Tighten turnbuckle slightly and recheck up and down travel against handle position.

f. When correct travel and flap handle agreement with flap surface has been obtained, safety all nuts, turnbuckles and pins

in system.

g. Replace handle boot.

TABLE 5-1 SURFACE TRAVELS AND CONTROL TENSIONS

SURFACE TRAVELS (DEGREES)

AILERON	Up	27.5°	+0 -2	Down	19°	+0 -2
ELEVATOR	Up	28°	+0 -1	Down	24°	+2 -2
7ECA - ELEVATOR	Up	24°	+0 -2	Down	24°	+2 -2
TAB-ELEV.	Up	17.5°	+2 -0	Down	44°	+1 -1
7ECA - TAB-ELEV.	Up	17.5°	+2 -0	Down	37.5°	+2 -0
RUDDER	L.	25°	+0 -2	R.	25°	+0 -2
FLAP	Up	0°	+1 -1	Down	35°	+1 -1

CABLE TENSIONS (LBS)

AILERON	20 to 30
ELEVATOR	45 to 55
TAB-ELEV.	15 to 20
RUDDER	Within 5 lbs. of each other
FLAPS	Full down position - Up to 45 lbs.

5-15. INSTALLATION OF AILERON CONTROLS (See Figure 5-1)

a. Install torque tube assembly in reverse order of removal. Grease end bearings per Table 2-6.

b. Install side aileron bellcrank in reverse order of removal.

c. Install wing aileron hinge bracket and sector in reverse order of removal. Do not overtighten bolts thru spars as wood can easily be crushed here. Cables should be connected before

installing sector.

d. Route aileron actuating cable from wing thru side pulley and connect to side cable at turnbuckles.

e. Route aileron balance cable thru fuselage fairlead and connect to opposite cable at cabin center.

f. Place ailerons in an approximate normal position (neutral) and with control stick centered adjust three turnbuckles evenly to obtain an approximate tension (check tension). (See Figure 5-6 and Table 5-1)

g. Check right aileron down travel (See Figure 5-7). Adjust to correct down travel with push rod. Measure up travel. Check down travel on left aileron, adjust push rod to obtain correct travel. Check up travel. Recheck tension. Reset tension by adjusting all turnbuckles evenly. Turnbuckles should have approximately 1 1/2 threads showing out of barrel on each end when properly tensioned.

h. Safety all turnbuckles, push rods and cable attach hardware.

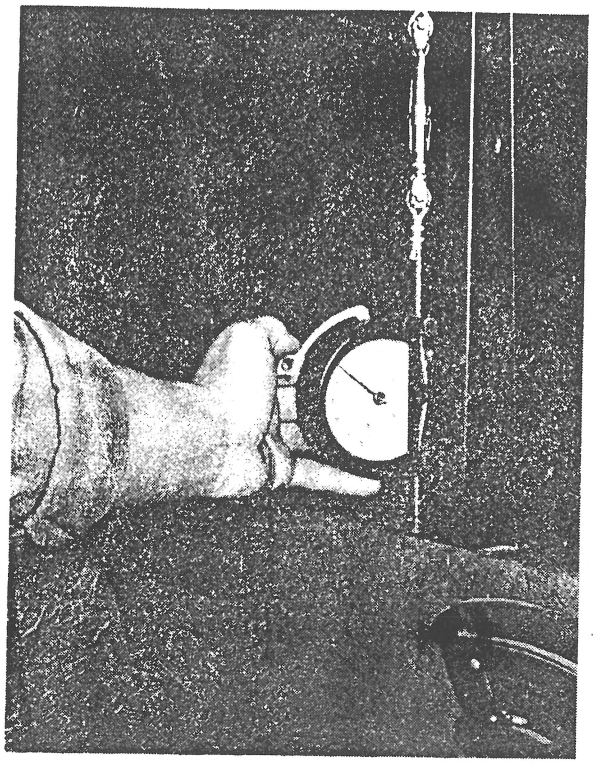

FIGURE 5-6.
MEASURING AILERON CABLE TENSION

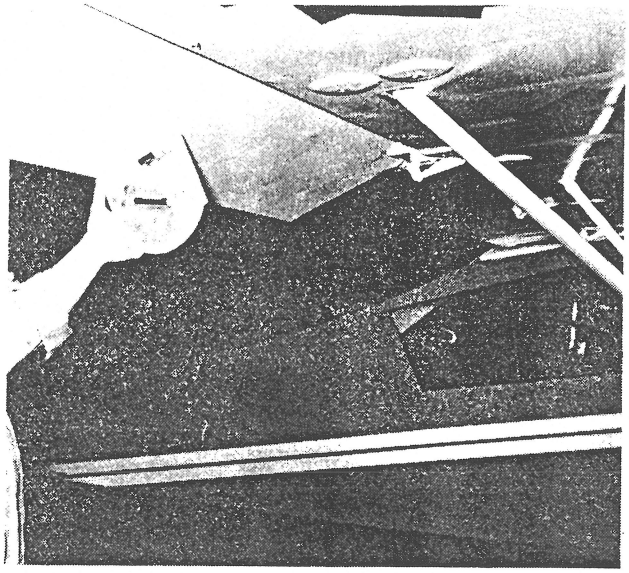

FIGURE 5-7.
MEASURING AILERON DOWN TRAVEL

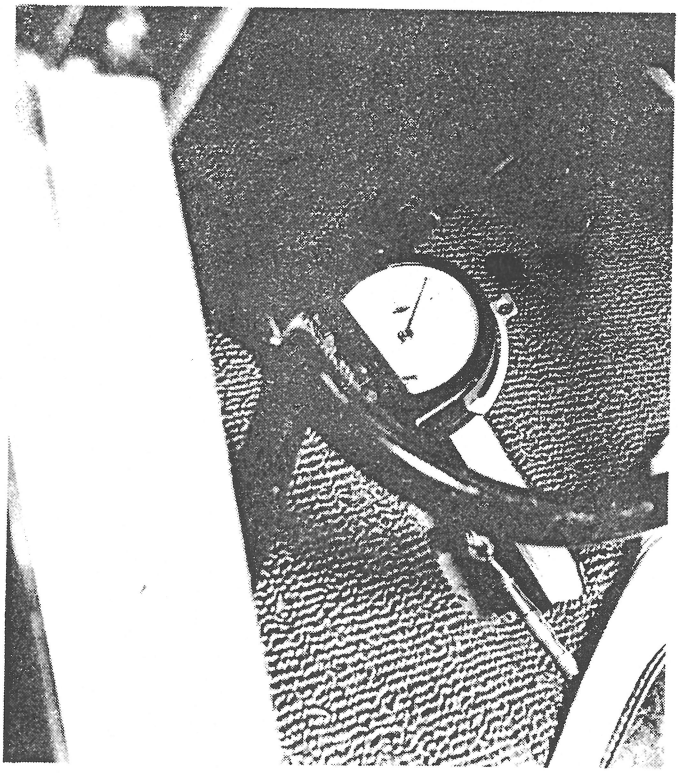

FIGURE 5-8.
MEASURING ELEVATOR CABLE TENSION

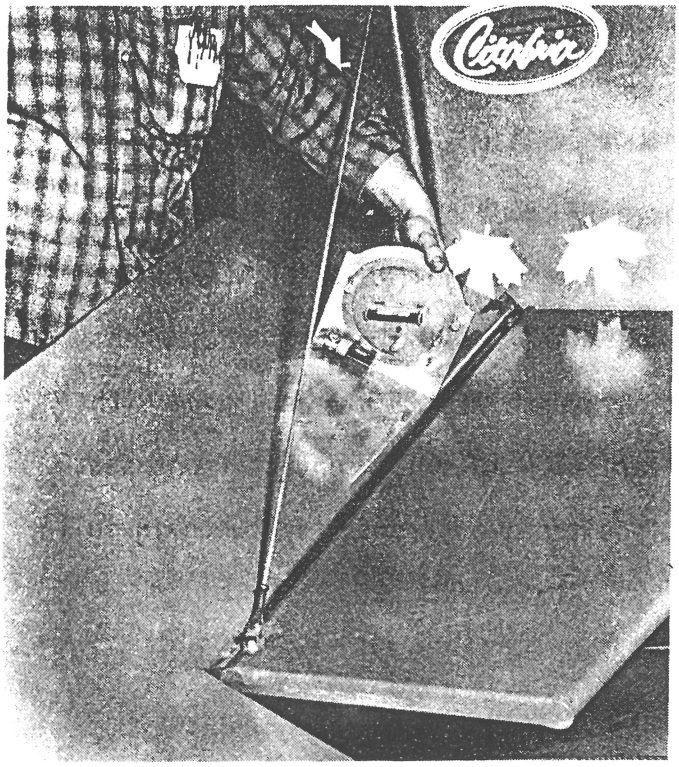

FIGURE 5-9.
MEASURING ELEVATOR UP TRAVEL

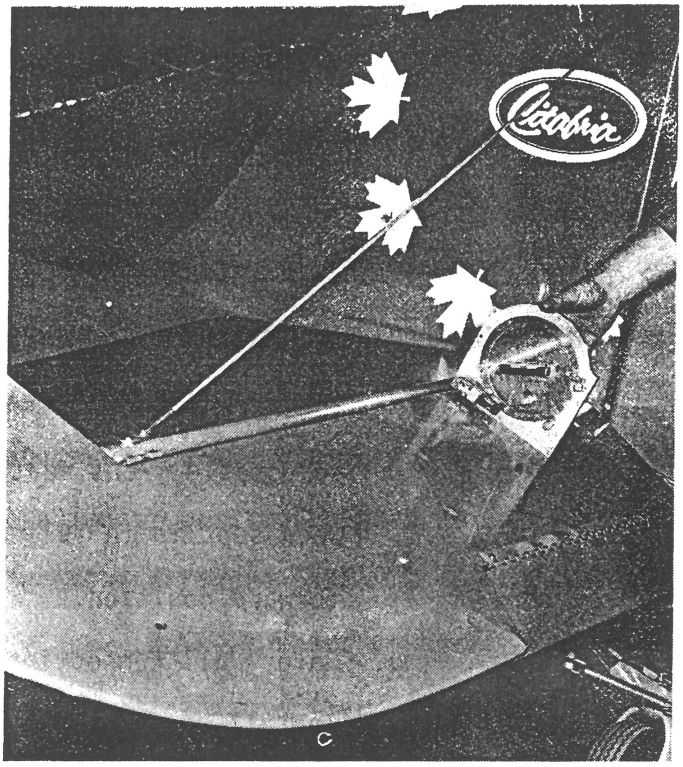

FIGURE 5-10.
MEASURING ELEVATOR DOWN TRAVEL

5-16. INSTALLATION OF ELEVATOR CONTROL SYSTEM AND RIGGING

a. Install elevator cables by connecting at rear stick socket and push-pull tube. Cable with the turnbuckle at end should be top cable. Route cables thru pulleys. Push-pull tube cable routes over rear top pulley. Connect cables to elevator horn after making sure that cables are not crossed or routed around fuselage members, bulkheads or other cables.

b. With elevator in neutral, draw turnbuckles evenly tight to give proper tension (See Figure 5-8 and Table 5-1).

c. Measure up travel (See Figure 5-9) from neutral (parallel to stabilizer). Adjust with elevator stop bolts on elevator horn.

Measure travels using stabilizer surface as a base.

d. Measure down travel (See Figure 5-10). Set travel with stop bolts on elevator horn.

e. Recheck cable tension.

f. Stick extreme locations may be moved slightly fore or aft by loosening one elevator cable turnbuckle and tightening the other. Rear stick must not contact back of front seat when in extreme forward position. When aircraft is equipped with adjustable front seat, rear stick must not contact front seat when seat is in full aft position, or front stick when in full forward position.

g. Safety all connections.

h. Install horn cover at rear fin post.

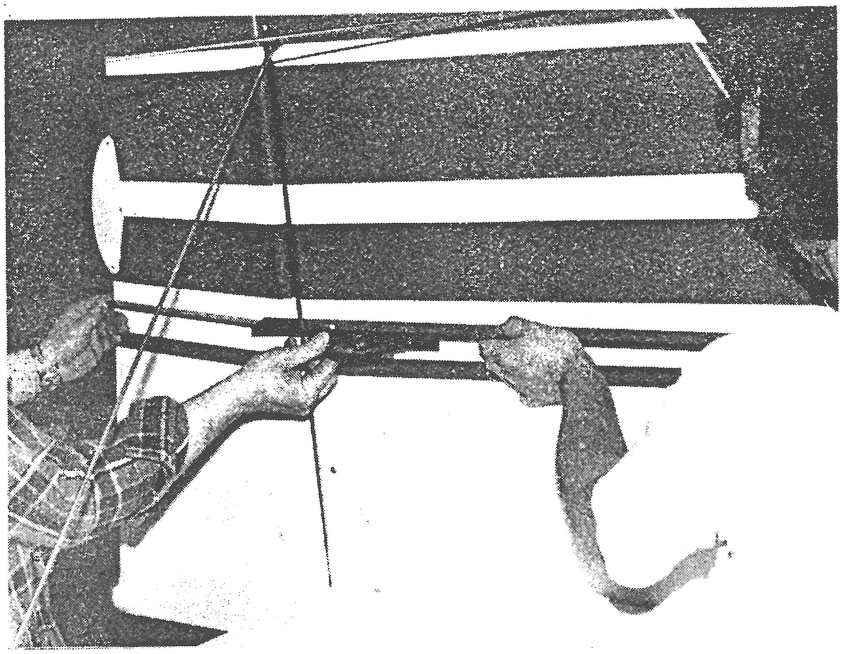

FIGURE 5-11.
MEASURING RUDDER TRAVEL FROM VERTICAL FIN

5-17. INSTALLATION OF RUDDER CONTROLS (See Figure 5-2)

a. Install rudder pedals and cables in reverse order of removal. Check for binding of cables and pulleys in baggage compartment cable guard tubes.

b. Connect rudder cables at rudder. Install rudder springs, large springs on rear pedals, smaller springs on forward pedals.

c. Check travel using angle movement jig (See Figure 5-11) or measure using fin surface as base. Remove or add steel material to studs on fin tube to allow proper rudder horn movement.

d. Set tension. (See Table 5-1 and Figure 5-12) Tension may be set up by placing main rudder cables forward connections in various locations on adjustment plates. (See Figure 5-2)

Note: Placing cable connections in other locations in plates will position rudder pedals slightly further aft.

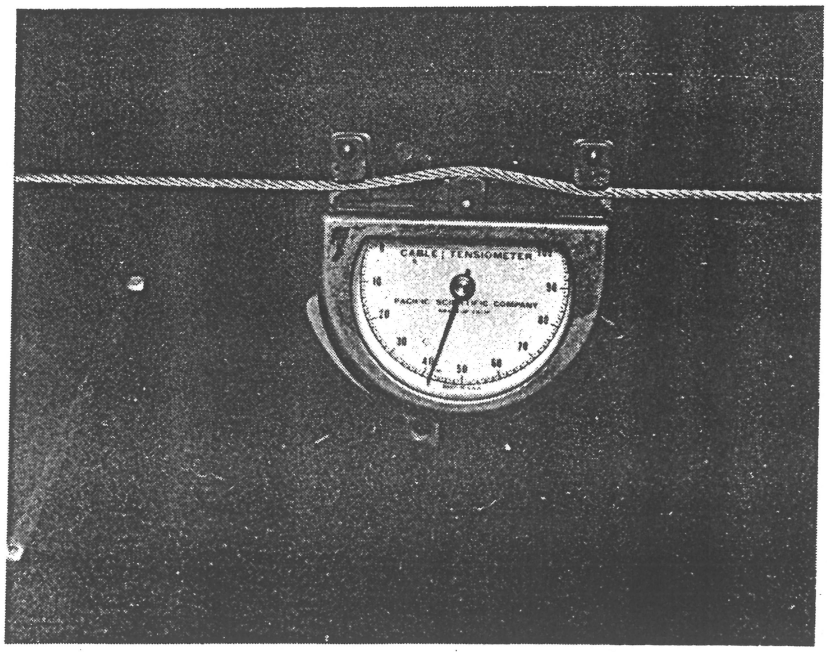

FIGURE 5-12.
MEASURING RUDDER CABLE TENSION

5-18. INSTALLATION OF TRIM TAB CONTROL SYSTEM & RIGGING (See Figure 5-2)

a. Install trim tab handle, cables and pulleys in reverse order of removal. Check for proper operation of pulleys and for binding or rubbing of cables.

b. Connect cables to trim tab horn thru turnbuckles.

c. With elevator in neutral, set tension by use of turnbuckles. (See Figure 5-13)

d. Set trim tab handle full forward. Measure tab up travel (with respect to elevator surface). (See Table 5-1 and Figure 5-14) Adjust to correct value with turnbuckles.

e. Set down travel to correct value. Adjust down stop at trim tab horn to agree. Recheck tension.

f. Safety all turnbuckles and attachments.

g. Check location of trim tab handle placard. Reposition placard such that with elevator and trim tab in neutral handle indicates neutral on placard.

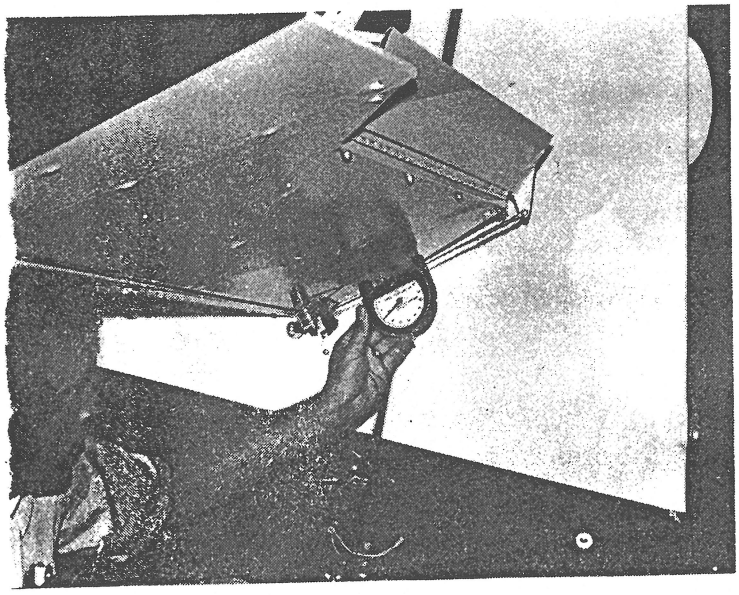

FIGURE 5-13.
MEASURING TRIM TAB CABLE TENSION

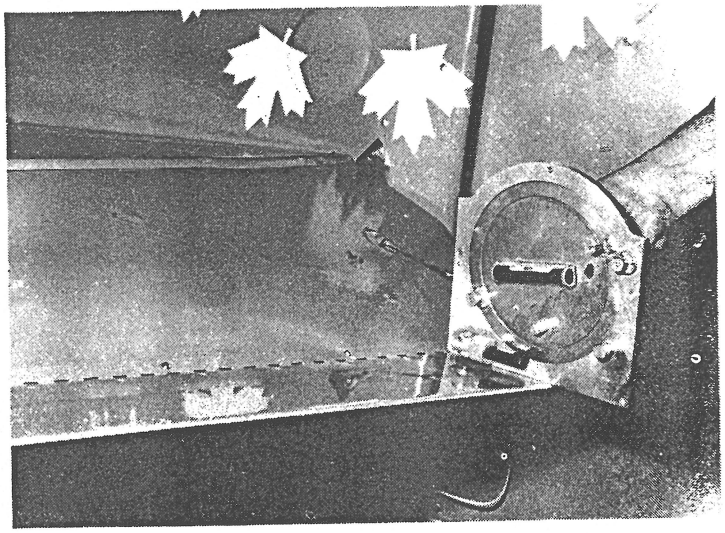

FIGURE 5-14.
MEASURING TRIM TAB UP TRAVEL

SECTION 6

LANDING GEAR AND BRAKE SYSTEM

		PAGE
6-1.	GENERAL	6-2
6-2.	REMOVAL OF MAIN LANDING GEAR LEG ASSEMBLY	6-3
6-3.	REMOVAL OF MAIN WHEEL ASSEMBLY	6-3
6-4.	DISASSEMBLY OF MAIN WHEEL	6-3
6-5.	REMOVAL AND INSPECTION OF BRAKE ASSEMBLY	6-6
6-6.	REMOVAL OF TAILWHEEL ASSEMBLY	6-6
6-7.	REMOVAL OF TAILWHEEL SPRINGS	6-7
6-8.	REMOVAL OF BRAKE HYDRAULIC SYSTEM	6-7
6-9.	REPLACEMENT OF 'O' RINGS IN MASTER CYLINDER	6-9
6-10.	REPLACEMENT OF 'O' RINGS IN PARKING BRAKE VALVE (GERDES)	6-9
6-11.	REPLACEMENT OF 'O' RINGS IN MASTER CYLINDER (GERDES)	6-12
6-12.	INSTALLATION OF MASTER CYLINDER	6-12
6-13.	INSTALLATION OF PARKING BRAKE VALVE (GERDES)	6-12
6-14.	ASSEMBLY AND INSTALLATION OF MAIN WHEEL	6-12
6-15.	INSTALLING MAIN GEAR AND WHEEL ASSEMBLY	6-13
6-16.	REPLACEMENT OF GEAR LEG	6-14
6-17.	ALIGNMENT OF WHEEL (TOE IN)	6-14
6-18.	TIRE AND GEAR LEG REPLACEMENT COMBINATIONS	6-15
6-19.	INSTALLATION OF TAILWHEEL ASSEMBLY	6-16

SECTION 6

LANDING GEAR AND BRAKE SYSTEM

6-1. GENERAL

During normal landing and taxi operations, the main gear legs act as primary shock absorbing units and provide support for majority of aircraft weight. The tailwheel provides for longitudinal support at the aircraft tail. Steering is accomplished thru rudder control system and interconnect tailwheel. Brakes on each main wheel give forward motion control and aid in steering. See Section 6-5 for brake lining inspection and replacement.

Loads from main gear are transferred thru the inboard main attach bolt and thru the 'U' shaped bolt surrounding the gear leg at the outboard longeron into fuselage structure.

FIGURE 6-1.
VIEW LANDING GEAR REMOVAL

6-2. REMOVAL OF MAIN LANDING GEAR LEG ASSEMBLY (See Figure 6-1)

a. Pull parking brake control out to minimize brake fluid loss. Disconnect brake line at fuselage.

b. Open wraparound or remove belly pan.

c. Hoist (or temporarily lift one side) of the aircraft. (See Section 2-4)

d. Loosen "U" bolt nuts and gently tap "U" bolt out approximately 1/8 inch.

e. Remove thru bolt located at inboard end of gear leg. Gear leg may now be removed by sliding outboard and up. Do not allow leg to rotate any direction excessively or damage may be sustained on adjacent parts.

6-3. REMOVAL OF MAIN WHEEL ASSEMBLY (See Figure 6-2)

a. Remove wheel fairings.

b. Disconnect brake line at wheel cylinder.

c. Remove 2 bolts holding the brake calipers against wheel disc. Remove cotter pin from outboard wheel nut.

d. Hoist aircraft.

e. Remove outboard wheel nut. Slide wheel and tire assembly off end of axle.

6-4. DISASSEMBLY OF MAIN WHEEL (See Figure 6-2)

a. Deflate tire.

b. Remove the three wheel thru bolts.

c. Break tire loose from wheel rim and disassemble.

d. Remove felt keeper rings, remove felt and remove bearing races.

e. Inspect for tire wear and replace when tire is worn smooth, uneven and smooth or is cut, cracked or bruised.

f. Clean bearing races. Inspect and replace if rollers or cones are scored or excessively worn.

g. Replace felt seals if they have become hard or dirty.

FIGURE 6-2

LANDING GEAR AND WHEEL ASSEMBLY

CLEVELAND

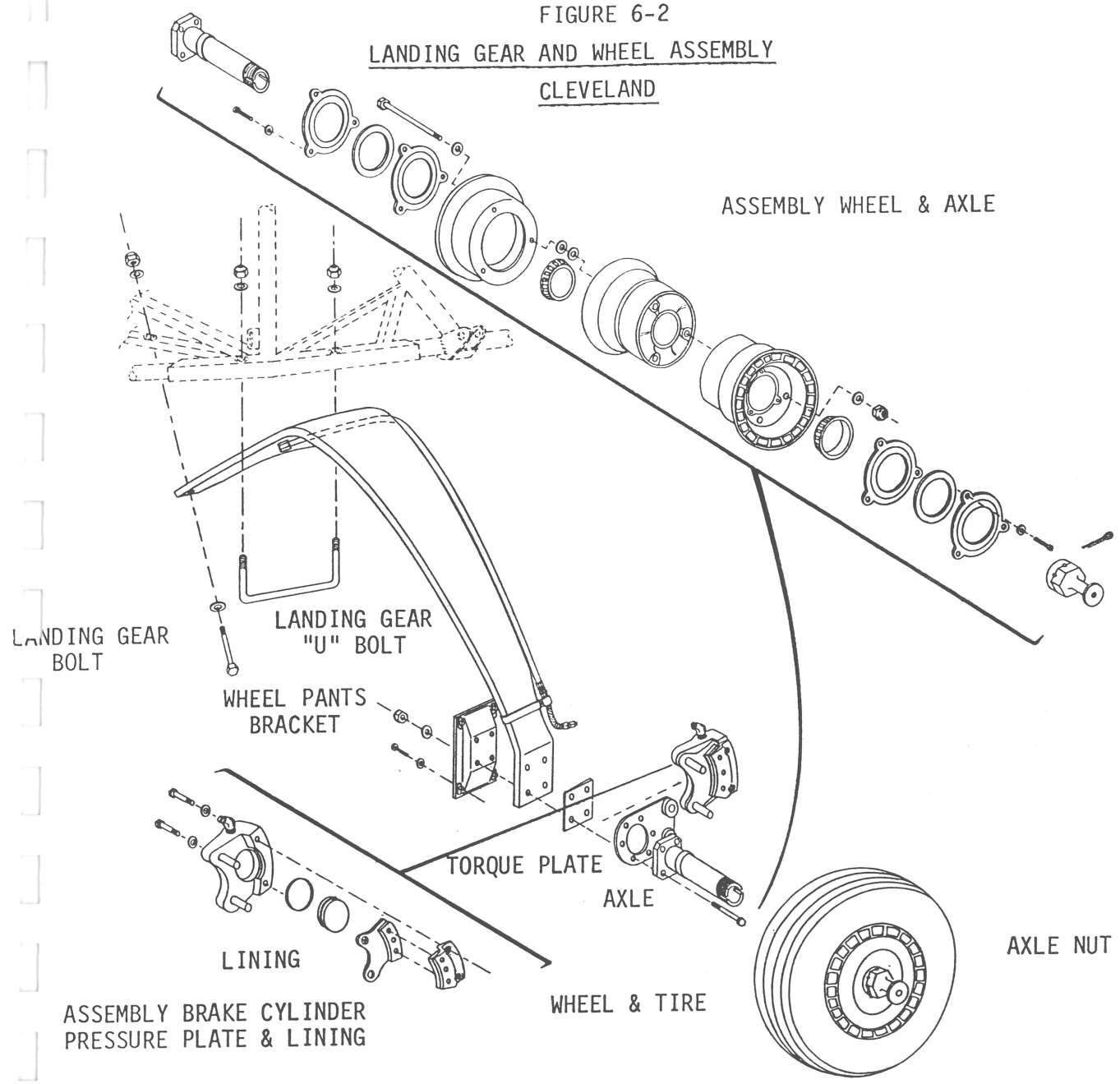

AXLE NUT

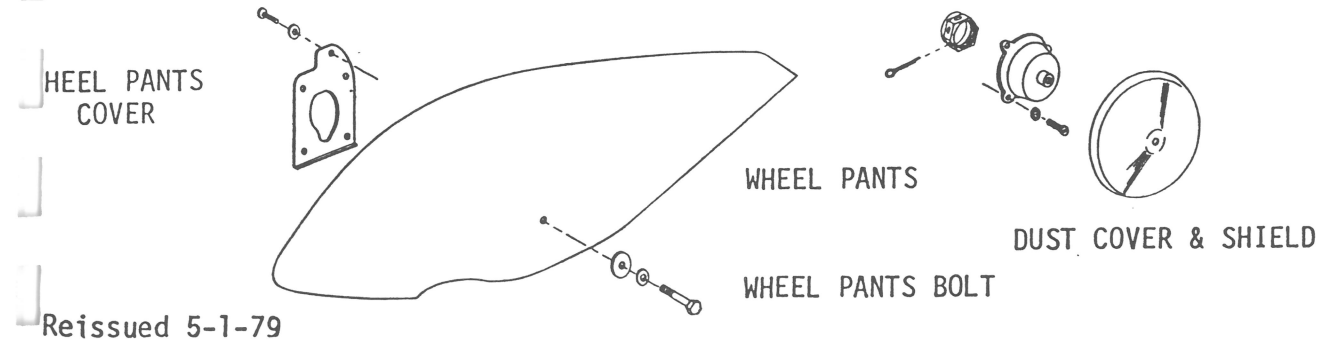

6-5. REMOVAL AND INSPECTION OF BRAKE ASSEMBLY (See Figure 6-2)

a. Remove axle attachment bolts, remove axle and brake torque plate assembly.

b. Brake lining plates are now excessible for relining.

c. Visually inspect brake while it is installed on airplane. No adjustment of brake clearance is necessary. If, after extended service, the brake linings become excessively worn or worn uneven, replace with new brake linings as follows:

Note: Linings should be replaced when the thickness of any one segment is 3/32 inch or less, or the lining is worn uneven.

1. Remove the brake back plates and spacer by removing the two bolts from the brake assembly.
2. Move the balance of the brake assembly away from the brake disc far enough to remove the brake pressure plate. (It will not be necessary to disconnect the hydraulic lines.)
3. Remove the used linings by drilling and punching out the old rivets. Install the new brake linings and rivets.
4. Move the balance of the brake assembly away from the brake disc and reinstall the brake pressure plate.
5. After positioning brake assembly on the brake disc, bolt the brake back plate and spacer to the balance of brake assembly with the two bolts.

6-6. REMOVAL OF TAILWHEEL ASSEMBLY

a. Support aircraft just forward of tailwheel spring forward thru-bolt.

b. Disconnect tailwheel steering springs by holding rudder extreme left or right.

c. Remove single bolt holding wheel casting unto leaf springs.

d. Disassemble tailwheel.

6-7. REMOVAL OF TAILWHEEL SPRINGS

a. Remove "U" bolt support and forward single attach bolt. Single bolt is accessible thru left side inspection opening. Note position of springs and wear blocks.

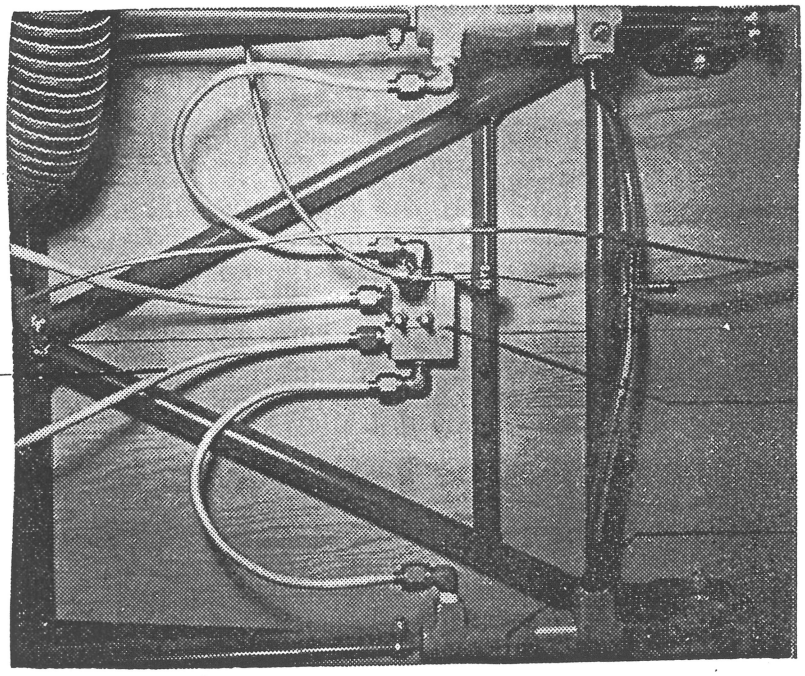

FIGURE 6-3.
BOTTOM VIEW FUSELAGE BRAKE SYSTEM (HEEL BRAKES)

6-8. REMOVAL OF BRAKE HYDRAULIC SYSTEM (See Figure 6-3 Heel)(Figure 6-3A Toe)

a. Brake system is accessible thru wraparound cowl lower opening. Disconnect hydraulic lines at master cylinder (and from parking brake valve and reservoir).

b. The master cylinder can now be removed by disconnecting from brake pedal and fuselage mounting support. Note position of bolt heads, washers and rear pedal connecting rod.

c. On aircraft equipped with a hydraulic parking brake valve (Gerdes), remove the valve by disconnecting parking brake control wire, disconnecting hydraulic lines and removing floorboard supporting screws.

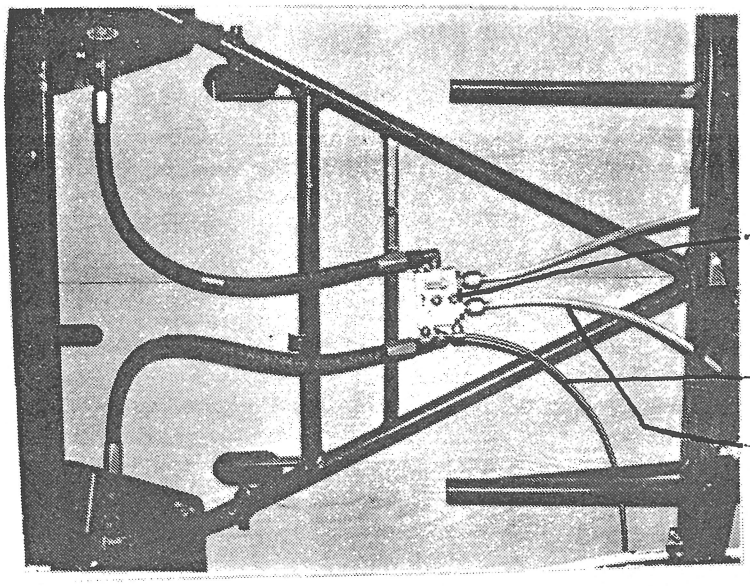

BOTTOM VIEW

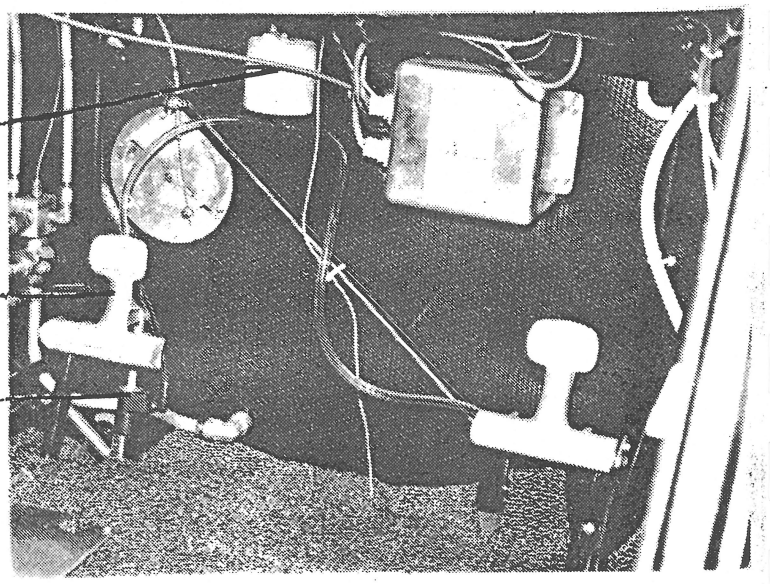

CABIN VIEW

FIGURE 6-3A.
VIEW FUSELAGE BRAKE SYSTEM (TOE BRAKES)

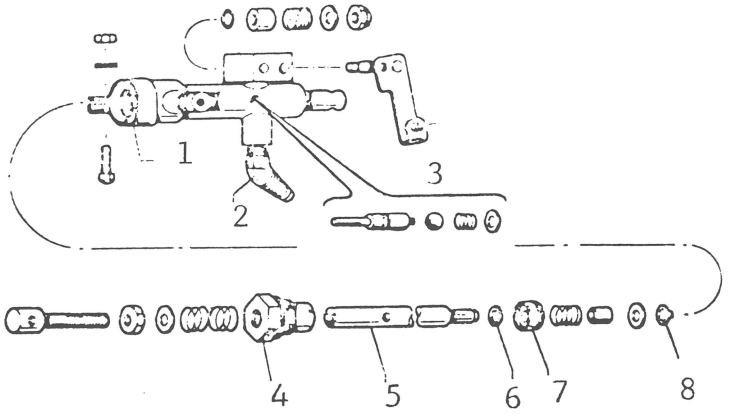

1. MASTER CYLINDER
2. FITTING
3. SPRING AND PIN ASSEMBLY
4. PACKING GLAND NUT
5. PISTON ROD
6. DYNA-SEAL
7. PISTON ASSEMBLY
8. SNAP RING

Figure 6-4
DISASSEMBLY OF CLEVELAND MASTER CYLINDER

6-9. REPLACEMENT OF "O" RINGS IN MASTER CYLINDER (See Figure 6-4)

a. If aircraft has Cleveland master cylinder (See identification label on cylinder body), remove large nut on fore end of cylinder body. Remove piston rod assembly. Remove snap ring on aft end of rod assembly. Remove aft outlet fitting. Remove spring and parking brake seal pin assembly. Remove parking brake cam nut and spring. Remove cam assembly.

b. Thoroughly clean all parts with suitable solvent. Replace any defective parts. Replace all "O" rings and dyna-seal. Reassemble unit being extremely careful so as to not cut the "O" rings when passing any machined edge.

6-10. REPLACEMENT OF "O" RINGS IN PARKING BRAKE VALVE (GERDES) (See Figure 6-5)

a. Remove snap ring from shaft end opposite the control arm. Note direction of removal of arm and cam assembly with respect to valve body. Remove arm and cam assembly. Remove inlet and out-

let fittings. Clean in suitable solvent. Replace "O" rings on cam assembly and in ball seats in outlet fittings. Use caution when installing cam assembly into body so as not to cut "O" rings on sharp machined surfaces. Install cam assembly in reverse order of disassembly.

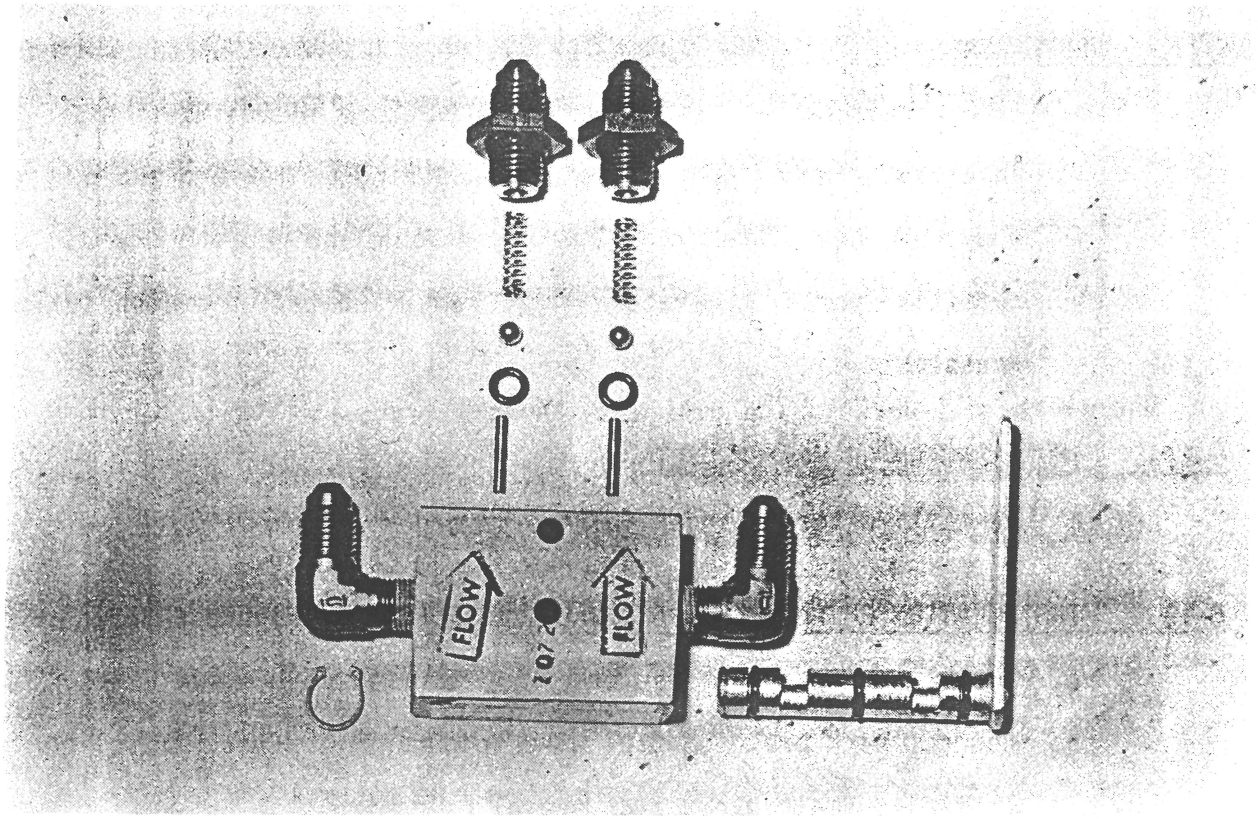

FIGURE 6-5. PARKING BRAKE VALVE ASSEMBLY

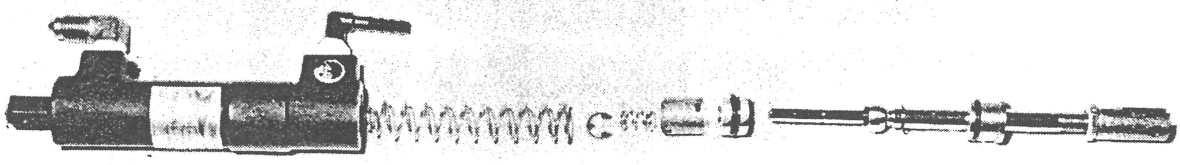

FIGURE 6-6. MASTER CYLINDER ASSEMBLY

6-11. REPLACEMENT OF "O" RINGS IN MASTER CYLINDER (GERDES)(See Figure 6-6)

a. If aircraft has Gerdes master cylinder (see identification label on cylinder body). Remove snap ring on forward end of body. Remove piston rod assembly. Clean and replace any defective parts. Replace all "O" rings and teflon piston seal. Reassemble.

6-12. INSTALLATION OF MASTER CYLINDER

a. Install master cylinder in reverse order of removal.

6-13. INSTALLATION OF PARKING BRAKE VALVE (GERDES)(See Figure 6-3)

a. Install valve in reverse order of removal.

b. Connect park brake control wire temporarily. Check travel on control to maintain 2 inch travel on control.

c. Connect all hydraulic lines.

6-14. ASSEMBLY AND INSTALLATION OF MAIN WHEEL (See Figure 6-2)

a. Pack bearings with grease.

b. Install tire and tube on proper wheel halves. Install three thru bolts and nuts.

c. Install bearings, felts and retainer rings.

d. Reinstall wheel on axle. (Axle brake torque plate and wheel pant mounting bracket must be attached to gear leg previous to installing wheel assembly.)

e. Install axle nut to allow wheel to turn free yet not fit loose on axle. Cotter key nut. Install dust cover or wheel pant.

6-15. INSTALLING MAIN GEAR AND WHEEL ASSEMBLY

a. Inflate tire to 24 $\pm$2 pounds. (6.00 x 6 tires)

b. Position upper gear leg through loosened "U" bolt. Install main thru-bolt from bottom side through gear leg and fuselage frame (See Figure 6-2). Install nut on thru-bolt.

c. Snug "U" bolt nuts; do not tighten.

1. Aircraft with AN7-25A thru-bolt (AN960-716 washer and AN365-724 nut): torque thru-bolt to 450-500 in-lbs. Bellanca Aircraft Corporation recommends that the AN thru-bolt, washers and nuts be replaced at or before 500 hours time in service (more frequent when aircraft used primarily for training and/or operating from rough landing fields). Bellanca also recommends that the AN thru-bolts be replaced with a high strength MS20007-32 allenhead thru-bolt and associated washer/nut.

2. Aircraft with MS20007-32 thru-bolt (MS20002-C7, MS20002-7 washers and ZEB1845-070 nut): torque thru-bolt to 650-700 in-lbs. The washer under the bolt head must be of the countersunk type. A twelve pointed 9/16 inch box wrench must be used on nut.

d. Torque "U" bolt to 450-500 in-lbs. with gear off ground.

e. Install brake line at fuselage bulkhead fitting and at brake wheel cylinder.

f. Bleed brakes per 2-11.

6-16. REPLACEMENT OF GEAR LEG

a. Gear leg should be replaced if damaged, nicked or scarred.

b. With aircraft loaded and rolled forward approximately 20 feet camber angle should not exceed -5° (top of wheel inboard). Replace gear leg if angle exceeds this amount.

> **CAUTION**
>
> Handle gear leg carefully at all times to avoid damage to edges and surfaces. The gear leg is heat-treated and must not be repaired by welding, drilling, bending or machining.

6-17. ALIGNMENT OF WHEEL (TOE IN) (See Figure 6-7)

a. Inflate tires to 24 pounds $\pm$ 2.

b. With airplane longitudinally level, lay straight edge across aft face of tires. Block straight up to approximate centerline of tire if necessary.

c. Shim straight edge aft to achieve same measurement from plumb line to straight edge on both wheels.

d. Using large square, place square against straight edge and tire surfaces. Determine angle difference if wheel is not perpendicular or has more than 1° toe in.

e. If toe in exceeds above values in either direction, add sufficient shims between gear leg and brake torque plate to correct. Not more than three shims should be installed. Wheel and axle must be removed to install shims.

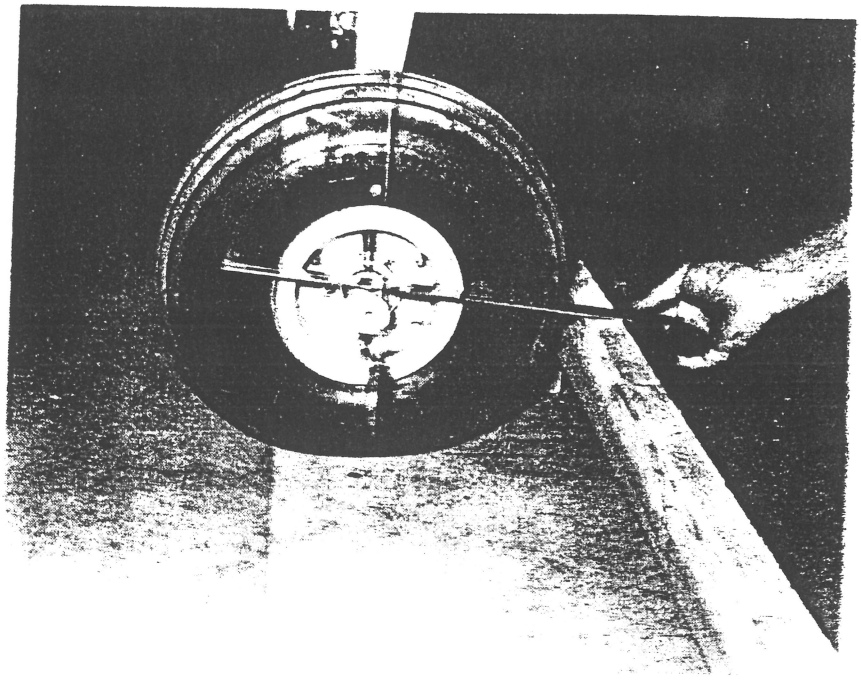

FIGURE 6-7.
MEASURING GEAR TOE IN

6-18. TIRE AND GEAR LEG REPLACEMENT COMBINATIONS

GEAR LEG TYPE	PROP DIA.	TIRE SIZE (MIN.)
Straight lower aft edge	73 in.	800 x 6 (4 Ply)
Straight lower aft edge	72 in.	700 x 6 (6 Ply)
Radii lower aft edge	73 in.	600 x 6 (4 Ply)
Radii lower aft edge	72 in.	600 x 6 (4 Ply)

Replace gear legs with identical items as original (both sides) or replace with later design. Later design has reduced width and radiis on aft lower section of gear leg. Use above chart for minimum size on tire replacement.

6-19. INSTALLATION OF TAILWHEEL ASSEMBLY

a. Install tailwheel springs in reverse order of removal.

b. Install tailwheel.

c. Connect steering spring to rudder horn and tailwheel horn.

Note: Tailwheel must be parallel to rudder surface. If not, the aluminum steering horn at bottom of rudder post should be removed, replaced and realigned by match drilling horn with rudder.

SECTION 7

POWER PLANT

		PAGE
7-1.	GENERAL	7-3
7-2.	REMOVAL OF COWLING	7-3
7-3.	REMOVAL OF PROPELLER SPINNER	7-3
7-4.	REMOVAL OF PROPELLER	7-3
7-5.	REMOVAL OF ENGINE	7-3
7-6.	REMOVAL OF ENGINE FROM ENGINE MOUNT	7-5
7-7.	INSTALLATION OF ENGINE MOUNT ON FIREWALL	7-5
7-8.	INSTALLATION OF ENGINE	7-5
7-9.	INSTALLATION OF PROPELLER	7-9
7-10.	INSTALLATION OF COWLING	7-10
7-11.	PROPELLER CARE AND MAINTENANCE	7-10
7-12.	CARBURETOR MAINTENANCE	7-12
7-13.	ADJUSTMENT OF IDLE MIXTURE (CARBURETOR)	7-12
7-14.	ADJUSTMENT OF ENGINE IDLING SPEED (CARBURETOR)	7-13
7-15.	INJECTOR MAINTENANCE (MODEL 7KCAB)	7-14
7-16.	ADJUSTMENT OF IDLE SPEED AND MIXTURE (INJECTOR) 7KCAB	7-15
7-17.	EXHAUST SYSTEM	7-18
7-18.	SPARK PLUGS	7-18
7-19.	OIL RELIEF VALVE	7-20
7-20.	OIL SCREENS	7-20
7-21.	OIL COOLER (IF EQUIPPED)	7-21
7-22.	RECOMMENDATIONS FOR CHANGING OIL	7-22
7-23.	ENGINE BREATHER SYSTEM (7KCAB) IO-320-E2A or E2B	7-23
7-24.	INVERTED OIL PICKUP SYSTEM (7KCAB) AEIO-320-E2B	7-26

SECTION 7

POWER PLANT

(Con't.)

		PAGE
7-25.	INVERTED OIL PICKUP SYSTEM (IN ENGINE SUMP) Model 7KCAB (IO-320-E2A or E2B)	7-26
7-26.	TROUBLESHOOTING	7-26

SECTION 7

POWER PLANT

7-1. GENERAL

The Citabria is equipped with a Lycoming carbureted or fuel injected engine and a fixed pitch metal Sensenich or McCauley propeller. For detailed engine specifications, see Table 2-1.

7-2. REMOVAL OF COWLING

a. Remove 1/4 turn fasteners from cowl split and firewall attach.

b. Remove top half of cowl.

c. Disconnect landing light wires at firewall.

d. Remove screws from lower cowl firewall attach and remove lower cowl.

7-3. REMOVAL OF PROPELLER SPINNER

a. Remove spinner by removing supporting screws.

7-4. REMOVAL OF PROPELLER

a. Remove six bolts from prop hub attach.

b. Remove spinner bulkhead.

c. Remove propeller.

d. Remove propeller spinner backplate.

7-5. REMOVAL OF ENGINE

a. Shut off fuel valve in cabin.

b. Disconnect battery from electrical system.

c. Disconnect the following controls, hoses, etc.

1. Throttle control at carburetor (or injector) and engine mount clamp.
2. Carburetor or injector alternate air control from air box and engine mount clamp.
3. Mixture control from carburetor or injector and engine mount clamp.
4. Fuel line at carburetor or mechanical fuel pump inlet.
5. Cabin heater flex hoses at firewall (front and rear heater).
6. Tachometer shaft from rear of engine.
7. Oil temperature gauge line at rear of engine.
8. Oil pressure gauge line at firewall.
9. Fuel pressure line (Model 7KCAB).
10. Electrical wires from starter and alternator. Disconnect wires from wire clamps on engine.
11. Primer lines at tee fitting at rear of engine (except 7KCAB).
12. Magneto ground leads from magneto, one on each magneto. (Identify for ease of installation)
13. Vacuum pump hoses at vacuum pump rear of engine. (If equipped)
14. Disconnect electrical fuel pump ground wire at engine mount. (7KCAB)
15. Disconnect oil hose lines at engine sump. (7KCAB only)
16. Disconnect breather line at engine rear.

d. Support engine from engine hoist (approximate engine weight

300 pounds).

e. Remove four bolts at engine mount-firewall attach.

f. Remove engine with engine mount.

7-6. REMOVAL OF ENGINE FROM ENGINE MOUNT

a. Remove electrical ground wire from right side of mount.

b. Remove muffler straps from engine mount right and left mufflers. (If so equipped)

c. Disconnect breather from engine mount.

d. Remove four engine mount-engine attach bolts.

e. Remove engine from mount. Note: Engine may be removed directly from engine mount in 7-5 by omitting operations (e) and (f) of 7-5 and proceeding with 7-6 leaving the engine mount attached at firewall.

7-7. INSTALLATION OF ENGINE MOUNT ON FIREWALL

(With or without engine attached)

a. Install mount on mounting bolts.

b. Install washer and nut, torque to 450-500 inch pounds, if equipped with castellated nut safety with cotter pin.

7-8. INSTALLATION OF ENGINE (See Figure 7-1)

a. Place engine on hoist and lift into approximate position at mount.

b. Install shock mounts and mounting bolts in proper position on all four engine mounting lugs.

c. Insert mounting bolts with shock mounts into engine mount attach bushings. (See Figure 7-2 or 7-2A)

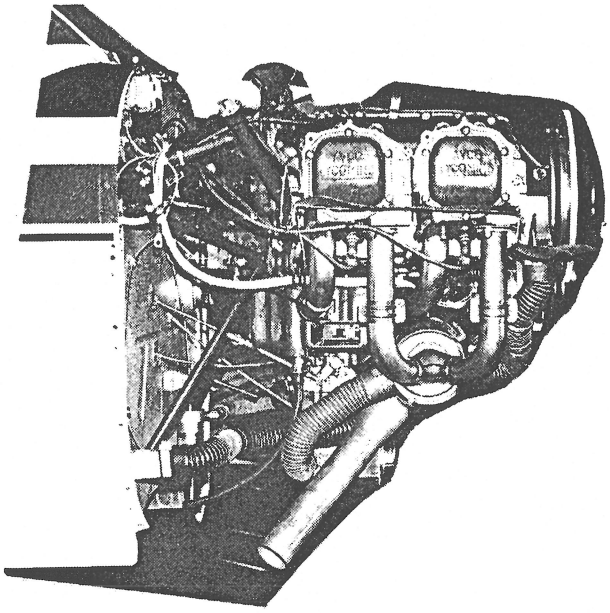

FIGURE 7-1.
INSTALLATION OF ENGINE

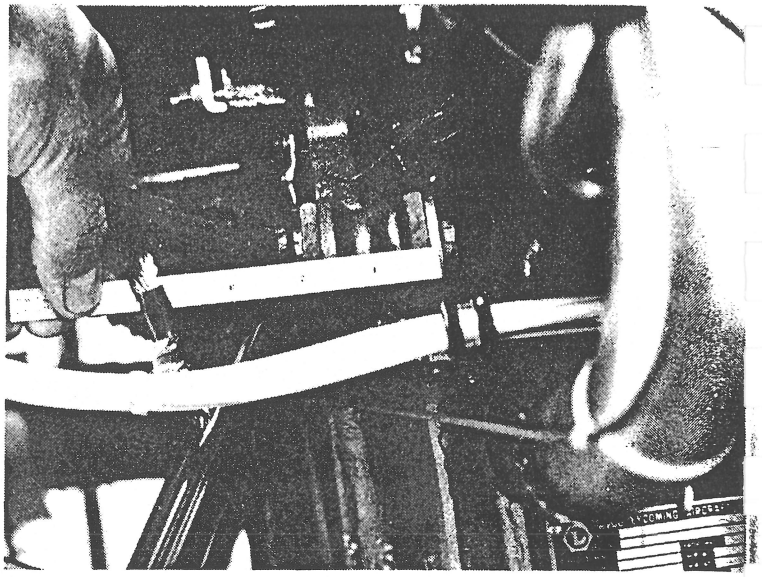

FIGURE 7-2.
INSTALLATION OF RUBBER SHOCK MOUNTS

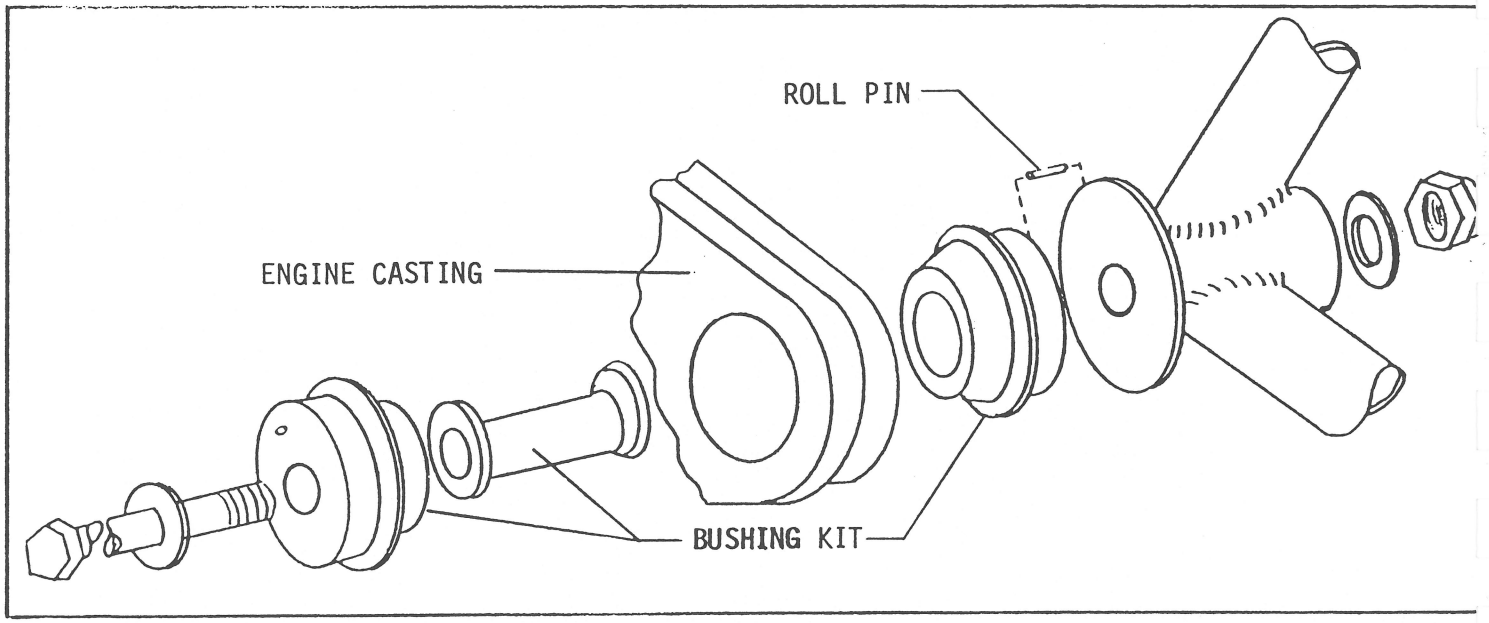

FIGURE 7-2A.
ASSEMBLY LORD ENGINE MOUNT BUSHINGS

d. Install washers and nut on bolt and tighten until rubber shock mounts are compressed to a dimension of 1.84 inches from the front edge of front rubber to the rear edge of the rear rubber. (See Figure 7-2) For aircraft equipped with Lord engine mount bushings, assemble per Figure 7-2A and torque to 350-450 inch pounds.

e. Connect the following controls, hoses, etc.

1. Vacuum pump hoses at vacuum pump (rear of engine).
2. Magneto ground leads from magnetos.
3. Primer lines at tee fitting at rear of engine (except 7KCAB).
4. Electrical wires to starter and to alternator. Connect wires to clamps on engine.
5. Oil pressure gauge line at rear of engine.
6. Oil temperature gauge line at rear of engine.
7. Tachometer shaft from rear of engine.
8. Cabin heater flex hoses at firewall. (Front and rear heaters)
9. Fuel line to carburetor or engine pump.
10. Mixture control to engine mount clamp and to mixture arm on carburetor. (Insure full movement at control panel gives full movement at carburetor or injector.)
11. Carburetor or injector heat control to engine mount clamp and to air box arm. (Insure full movement at control panel gives full movement at air box.)
12. Throttle control to engine mount clamp and to throttle arm

on carburetor or injector. (Insure full movement at control panel gives full movement at carburetor or injector arm.)

13. Electrical ground wire to right side of engine mount.
14. Muffler straps from mufflers (both) to engine mount. (Pre 1974)
15. Breather to engine mount.

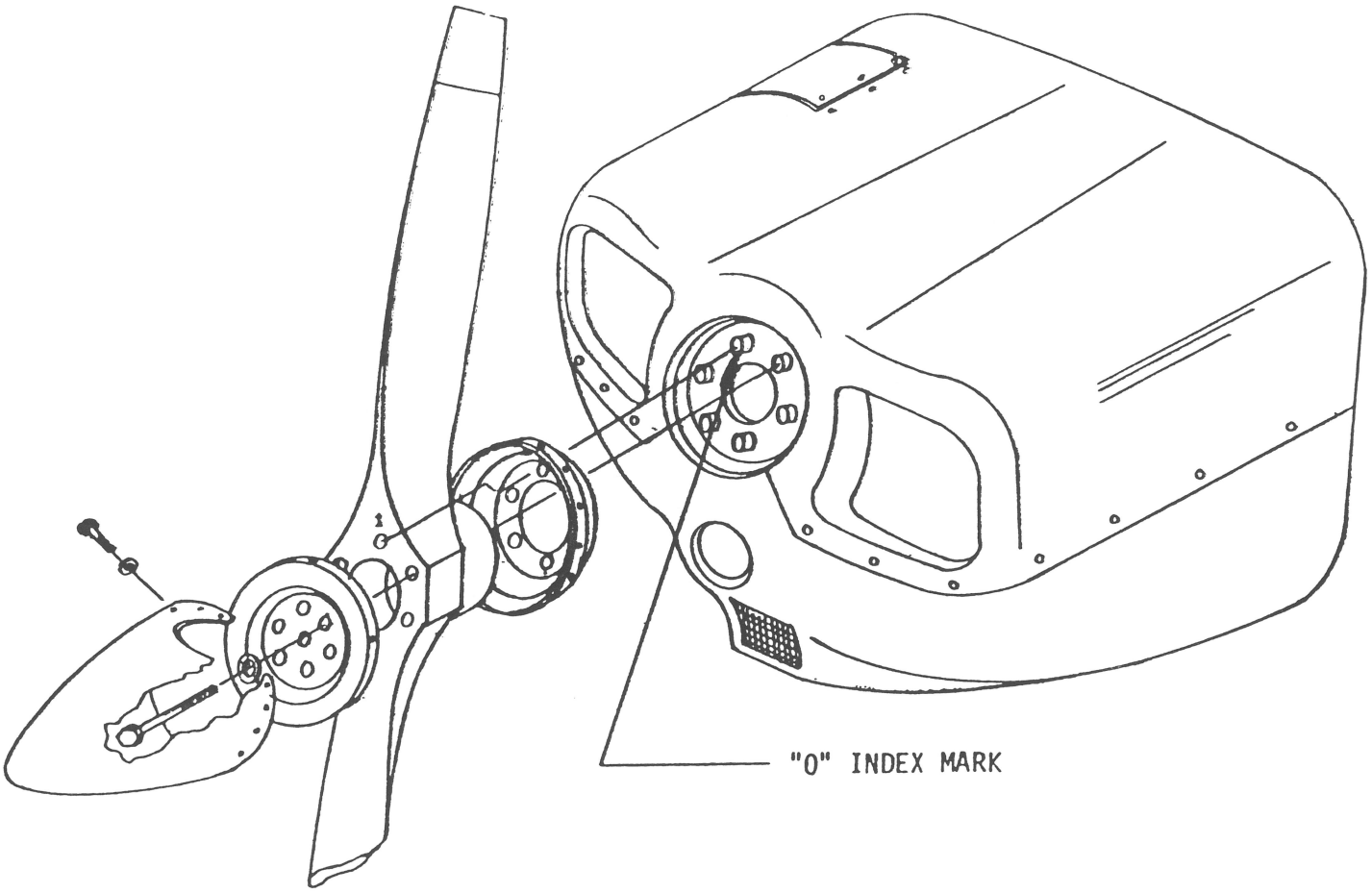

FIGURE 7-3.
INSTALLATION OF PROPELLER

7-9. INSTALLATION OF PROPELLER (See Figure 7-3)

a. Locate indexing "0" mark on engine ring gear.

b. Index #1 prop blade one bolt hole counter clockwise from index "0" mark on ring gear.

c. Index the prop spinner backplate and prop spinner to match the propeller indexing.

d. Place spinner backplate in proper position over propeller attach bushings.

e. Position propeller.

f. Position spinner bulkhead and install prop, attach bolts.

g. Torque prop bolts to 23-25 ft. lbs. and safety prop bolts. (Use steel safety wire.)

7-10. INSTALLATION OF COWLING

a. Put lower cowl in position, insuring that the rubber duct which connects the air filter to the carburetor or injector is installed over the connecting flange. Attach the ten screws at firewall. Do not tighten at this time.

b. Connect landing light ground wire to starter solenoid attach bolt. Connect landing light wire.

c. Position top half of cowl over engine. Position six 1/4 turn fasteners at aft edge to sockets in firewall, but do not secure. Attach top half to lower half with 1/4 turn fasteners. With all screws and fasteners in place, adjust cowl, if needed, to center propeller shaft in the propeller shaft opening in cowl. Tighten top six 1/4 turn fasteners and aft lower cowl screws.

7-11. PROPELLER CARE AND MAINTENANCE

a. Make complete pre-flight and post-flight inspections of blades for nicks, scratches, erosion, stone bruises and cracks, both look at and feel the surface.

b. Clean propeller frequently with a non-oil base solvent (stoddard or equivalent). Never use alkaline cleaner.

c. Protect propeller blades from moisture and corrosives, by wiping with a cloth dampened with oil or by waxing the blades

with an automotive type paste wax.

d. Minor damage should be repaired at once by qualified personnel in accordance with AC: 43: 13-1.

e. Have all major repairs and reconditioning done by an FAA certificated propeller repair station or by the propeller manufacturer.

f. Replace your propeller when there is any question as to its airworthiness.

g. Have your propeller completely reconditioned (including anodizing) after extensive flight time (provided it has not received prior damage requiring more frequent attention). Consult propeller manufacturer's data for recommended time between reconditioning.

h. Be sure that proper bolt torque is applied evenly when installing propeller. See decal on blade.

i. Do not put a propeller into service without a thorough inspection by qualified personnel if it has been subjected to impact or sudden stoppage.

j. Do not have propeller straightened except by qualified personnel: Even partial straightening of blades for convenience of shipping to repair station may cause hidden damage which if not detected, could result in a premature failure.

k. Do not repair blade defects by peening or welding.

7-12. CARBURETOR MAINTENANCE (See Figure 7-4)

In general, little attention is required between carburetor overhauls. However, it is recommended that the following items be checked during periodic inspection of engine.

a. Check tightness and lock wire of all nuts and screws which fasten the carburetor to the engine.

b. Check all fuel lines for tightness and evidence of leakage.

c. Check throttle and mixture control rods and levers for travel, tightness and lock wiring.

d. Clean the fuel inlet screen. (Refer to Figure 7-4)

e. Remove drain plug at aft position of carburetor and drain any accumulation of foreign matter.

f. Check carburetor air box for wear and full travel of heat door.

g. Check adjustment of idle mixture and idle speed.

7-13. ADJUSTMENT OF IDLE MIXTURE (CARBURETOR)

a. After performing the standard engine starting procedure, operate the engine for at least 2 minutes at 800 to 1200 RPMs to insure proper engine warm-up.

b. Draw back on the throttle control lever to obtain a reading of approximately 550 RPMs on the tachometer.

c. Turn the idle adjusting screw located near the rear of the carburetor clockwise, leaning the fuel mixture. Continue to do this until the engine begins to run rough, at which time the engine speed will decrease.

d. Turn the screw counter-clockwise until the engine runs smoothly again. Continue to turn the screw in the same direction until the engine begins to run rough once more. At this point, the fuel mixture will be too rich and the engine speed will decrease again.

e. Now advance the screw to a midway position between the lean and rich fuel mixture; the RPMs of the engine will reach a maximum idle speed for mixture settings.

7-14. ADJUSTMENT OF ENGINE IDLING SPEED (CARBURETOR)

a. Pull back the cockpit throttle control lever until it is fully aft and in the closed position. Observe the engine speed on the tachometer.

b. Adjust the idle adjustment screw to obtain from 500 to 600 RPMs. Rotate screw clockwise to increase the speed of the engine; counter-clockwise to decrease engine speed. The screw is located on the throttle arm. Note: One complete revolution of the carburetor idle screw provides a variation of approximately 100 RPMs in idling speed.

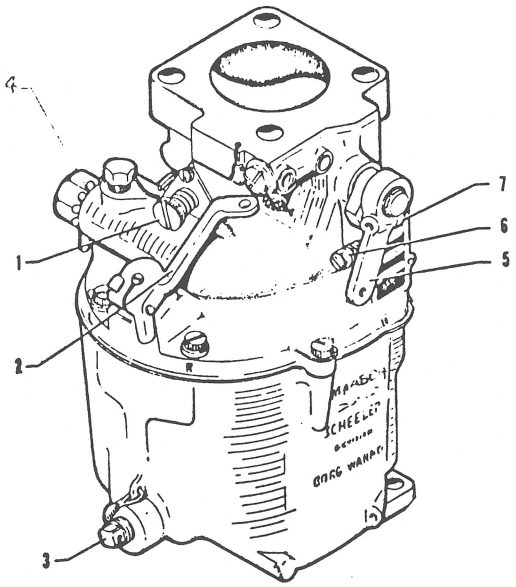

1. IDLE MIXTURE ADJUSTMENT
2. MIXTURE CONTROL ARM
3. BOWL DRAIN
4. FUEL INLET SCREEN
5. THROTTLE ARM
6. IDLE ADJUSTMENT
7. ARM SET SCREW

FIGURE 7-4.
CARBURETOR

7-15. INJECTOR MAINTENANCE (Model 7KCAB)

In general, little attention is required between injector overhauls. However, it is recommended that the following items be checked during periodic inspection of engine.

a. Clean the fuel inlet screen.

b. Remove and clean injector nozzles. Clean nozzles in lacquer thinner or ultra sonic cleaner, reinstall nozzles.

c. Check tightness and lock wire of all nuts and screws which fasten the injector to the engine.

d. Check all fuel lines for tightness and evidence of leakage. A slight fuel stain adjacent to the air bleed nozzles is not cause for concern.

e. Check throttle and mixture control rods and levers for travel, tightness and lock wiring.

f. Check adjustment of idle mixture and idle speed.

7-16. ADJUSTMENT OF IDLE SPEED AND MIXTURE (INJECTOR) 7KCAB

a. After performing the standard engine starting procedure, operate the engine for at least 2 minutes at 800 to 1200 RPMs to insure proper engine warm-up.

b. Draw back on the throttle control lever to obtain a reading of approximately 700 RPMs on the tachometer.

c. When the idling speed has been stabilized, move the cockpit mixture control lever with a smooth, steady pull into the IDLE CUT-OFF position and observe the tachometer for any change during the leaning out process. Caution must be exercised to return the mixture control to the FULL-RICH position before the RPM can drop to a point where the engine cuts out. An increase in RPM while leaning out indicates the idle mixture is on the rich side of best power. An immediate decrease in RPM (if not preceded by a momentary increase) indicates that the idle mixture is on the lean side of best power.

d. The desired idle setting is a compromise between one that is rich enough to provide a satisfactory acceleration under all conditions and lean enough to prevent spark plug fouling or rough operation. A rise of 25-50 RPM will usually satisfy both of these conditions.

e. If Step (d) indicates that the idle adjustment is too rich or too lean, turn the idle mixture adjustment one or two notches

in the direction required for correction and check this new position by repeating Step (c). Make additional adjustments as necessary.

f. Each time an adjustment is changed, clear the engine by running it up to approximately 2000 RPM before making mixture check.

g. The actual idle mixture adjustment is made by the lengthening (richening) or shortening (leaning) of the linkage between the throttle lever and idle valve lever. The center screw assembly has right hand threads on both ends but one end has a No. 10-24 thread and the other end has a No. 10-32 thread. For easy reference, consider only the coarse thread end. When it is turned out of its block, the linkage becomes longer and a richer mixture is provided. When it is turned into its block, the linkage is shortened and a leaner mixture is provided.

h. A major adjustment is available for use when the center screw bottoms out on either of the blocks. If the idle adjustment is almost satisfactory, measure the distance between the two blocks. Disconnect the spring from the most accessible linkage pin and remove the pin. Turn the block and adjustment screw until the adjusting wheel is centered and the distance between blocks is as previously measured. There is now additional adjustment range and the reference point is retained.

i. Make the final idle speed adjustment to obtain the desired idling RPM with closed throttle.

j. If the setting does not remain stable, check the idle linkage; any looseness in this linkage will cause erratic idling. In

all cases, allowance should be made for the effect of weather conditions upon idling adjustment. The relationship of the aircraft to the direction of the prevailing wind will have an effect on the propeller load and its RPM; hence, it is advisable to make the idle setting with the aircraft cross-wind.

k. Idle speed and mixture adjustments made according to this method should require very little further attention except for extreme variations in temperature and altitude.

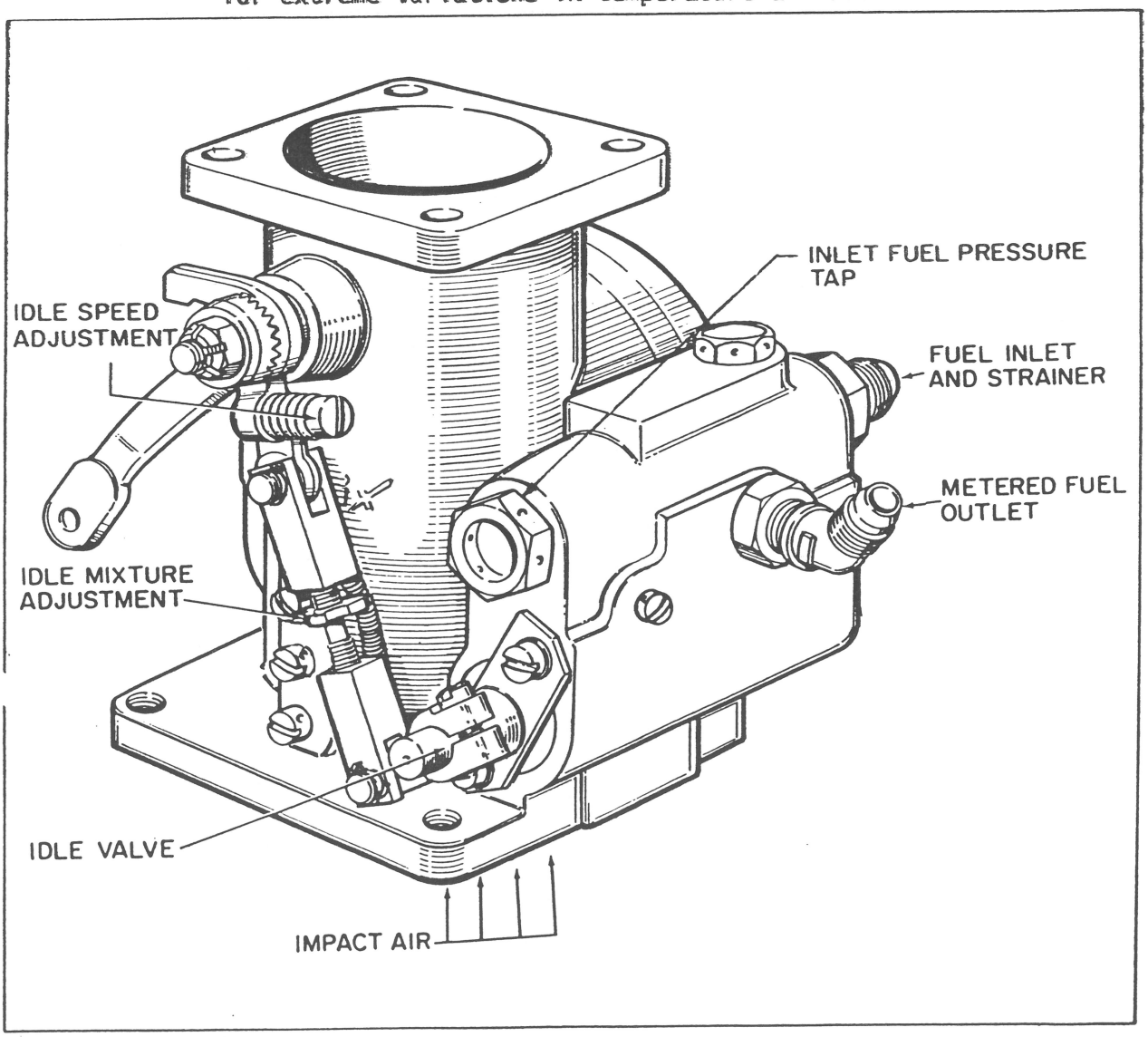

FIGURE 7-5.
INJECTOR

7-17. EXHAUST SYSTEM

The exhaust system should be checked thoroughly at each 100 hour inspection.

a. Determine the condition of the flange gaskets and that the flange nuts are tight.

b. Check exhaust stacks for cracks that might have developed at the exhaust flange and stack joints or around any welded and stressed areas.

c. Remove the heat shroud from around the muffler to determine condition of shroud and heater.

d. Tap the muffler enough to listen for any loose or broken interior parts.

e. Remove muffler from the stacks and inspect through the inlet and outlet holes. (Dual mufflers only)

f. Check condition of exhaust stack hanger strap. (Dual mufflers only)

g. Replace any defective parts.

7-18. SPARK PLUGS

a. To remove a spark plug, loosen the coupling nut on the ignition cable and remove the terminal insulator from the spark plug barrel well.

CAUTION

When removing the terminal insulator from the spark plug, use extreme care to withdraw the terminal straight from the spark plug barrel. Any misalignment could break the insulator or spring or scratch the insulator or ceramic insulation in the spark plug, necessitating replacement.

b. Remove the spark plugs, do not allow foreign objects to enter the spark plug holes. Visually inspect each plug for the following non-repairable defects.

1. Severely damaged shell or shield threads nicked up, stripped or cross-threaded.
2. Badly battered or rounded shell hexagons.
3. Out-of-round or damaged shielding barrel.
4. Chipped, cracked or broken ceramic insulator portions.
5. Badly eroded electrodes worn to approximately 50% of original size.

c. Clean the spark plugs, removing carbon and foreign deposits.

d. Test the spark plugs both electrically and for resistance. Set the electrode gap at .017 to .021 inch.

Note: Before reinstalling spark plugs, ascertain that the threads within the cylinder are clean and not damaged.

e. Apply anti-seize compound sparingly on the threads, install gasket and spark plugs. Torque to 30 ft-lbs. and carefully install leads.

7-19. OIL RELIEF VALVE

a. The function of the oil pressure relief valve, which is located just forward of the upper right engine mounting lug, is to maintain engine oil pressure within specified limits by withdrawing a portion of the oil from the circulating system and returning the oil to the sump should the pressure become excessive. This valve is not normally adjustable; however, particles of metal or other foreign matter lodged between ball and seat will result in a drop in oil pressure. It is advisable, therefore, to disassemble, inspect and clean the relief valve if excessive pressure fluctuations are noted.

b. The oil pressure relief valve is by no means to be confused with the oil cooler by-pass valve, which is located on the oil pressure screen housing mounting pad. The sole purpose of the by-pass valve is to serve as a safety measure, permitting pressure oil to by-pass the oil cooler entirely in case of an obstruction within the cooler.

7-20. OIL SCREENS

One oil screen is located in a dome shaped housing above and between the magnetos, the second in lower aft oil sump (except 7KCAB). These screeens should be cleaned at each oil change to remove any accumulation of sludge and to examine for metal filings or chips. If metal particles are found in the oil screens, the engine should be examined for internal damage.

a. To remove the pressure screen, remove the oil temperature bulb and the cap screws securing the housing.

b. With the housing and screen removed, clean and inspect both items, check the mating surface of the housing and accessory case for gasket particles.

c. Insert the screw into the housing so that the screw fits flush with the housing base. Using a new gasket, secure the housing to its mounting pad and torque cap screws to 75 inch pounds.

7-21. OIL COOLER (IF EQUIPPED)

a. When conducting a routine engine inspection, the oil cooler, lines and fittings should be checked for the following:

1. Oil cooler line attachments should be examined to be certain that all are tight and there is no indication of leakage.
2. Oil lines must have adequate clearance to adjacent parts and be properly aligned.
3. Oil cooler should be visually checked for leakage, distorted cells or blockage.
4. Cooling fins should be clean and undamaged.

b. During each engine overhaul, at indications of high oil temperatures or during a 500 hour inspection, the oil cooler should be removed, cleaned and checked for damaged fins and cells. When replacing the cooler, properly align mounting bolts and oil line connections such that cooler will not be damaged. While the oil cooler is removed, the oil lines

should be disconnected and flushed.

7-22. RECOMMENDATIONS FOR CHANGING OIL

a. If an additive oil is used in a new engine or a newly overhauled engine, high oil consumption might possibly be experienced. The anti-friction additives of some of these oils will retard the break-in of the piston rings and cylinder walls. This condition is easily corrected by the use of straight mineral oil until normal oil consumption is obtained, then change to the additive type.

b. In engines that have been operating on straight mineral oil for more than 100 hours, a change to detergent oil should be made with a degree of caution, the cleaning action of a detergent oil will tend to loosen sludge deposits and cause plugged oil passages. If an engine has been operating on straight mineral oil and is known to be in excessively dirty condition, the switch to detergent oil should be deferred until after the engine is overhauled.

c. When changing from straight mineral oil to detergent oil, the following precautionary steps should be taken:

   1. Do not add detergent oil to straight mineral oil. Drain the straight mineral oil from the engine and fill with detergent oil.
   2. Do not operate the engine longer than five hours before the first oil change.
   3. Check all oil screens for evidence of sludge or plugging. Change oil every ten hours if sludge conditions are evi-

dent. Resume normal oil drain periods after sludge conditions improve.

CAUTION

The terms "detergent", "additive" and "compounded" used herein are intended to refer to a class of aviation engine lubricating oils to which certain substances have been added to improve them for aircraft use. These terms do not refer to such materials commonly known as "top cylinder lubricant", "dopes", "carbon remover" which are sometimes added to fuel or oil. These products may cause damage to the engine and their presence in an engine will void the owner's warranty. Under no circumstances should automotive oil be used. The use of automotive lubricants in Lycoming engines is sufficient grounds for rejection of any warranty claims.

7-23. ENGINE BREATHER SYSTEM (Model 7KCAB) IO-320-E2A or E2B

Figures 7-6 and 7-7 show schematics of the engine breather system and oil routing as related to this system for normal and inverted operations.

Service operations on this system include:

a. Remove aluminum oil separator can and connecting lines. Determine that interior slider tube is operating by turning can upside down and back several times.

1. ENGINE CRANKCASE
2. OIL SUMP
3. OIL DRAIN & VALVE
4. OIL PICK-UP TUBE
5. SWINGING PICK-UP
6. ENGINE OIL PUMP
7. PRESSURE REGULATOR
8. PRESSURE OIL LINE
9. MAIN BEARINGS, CONNECTING BEARINGS, ETC.
10. BYPASS OIL LINE
11. BYPASS OIL RETURN TUBE
12. NORMAL BREATHER
13. OIL QUANTITY DIPSTICK
14. OIL BAFFLE
15. OIL BAFFLE TRAP DOOR
16. INVERTED BREATHER STANDPIPE
17. INVERTED BREATHER TUBE
18. OIL SEPARATOR
19. BREATHER
20. ELECTRIC PUMP (OPTIONAL)
21. VENT OUTLET ASSEMBLY

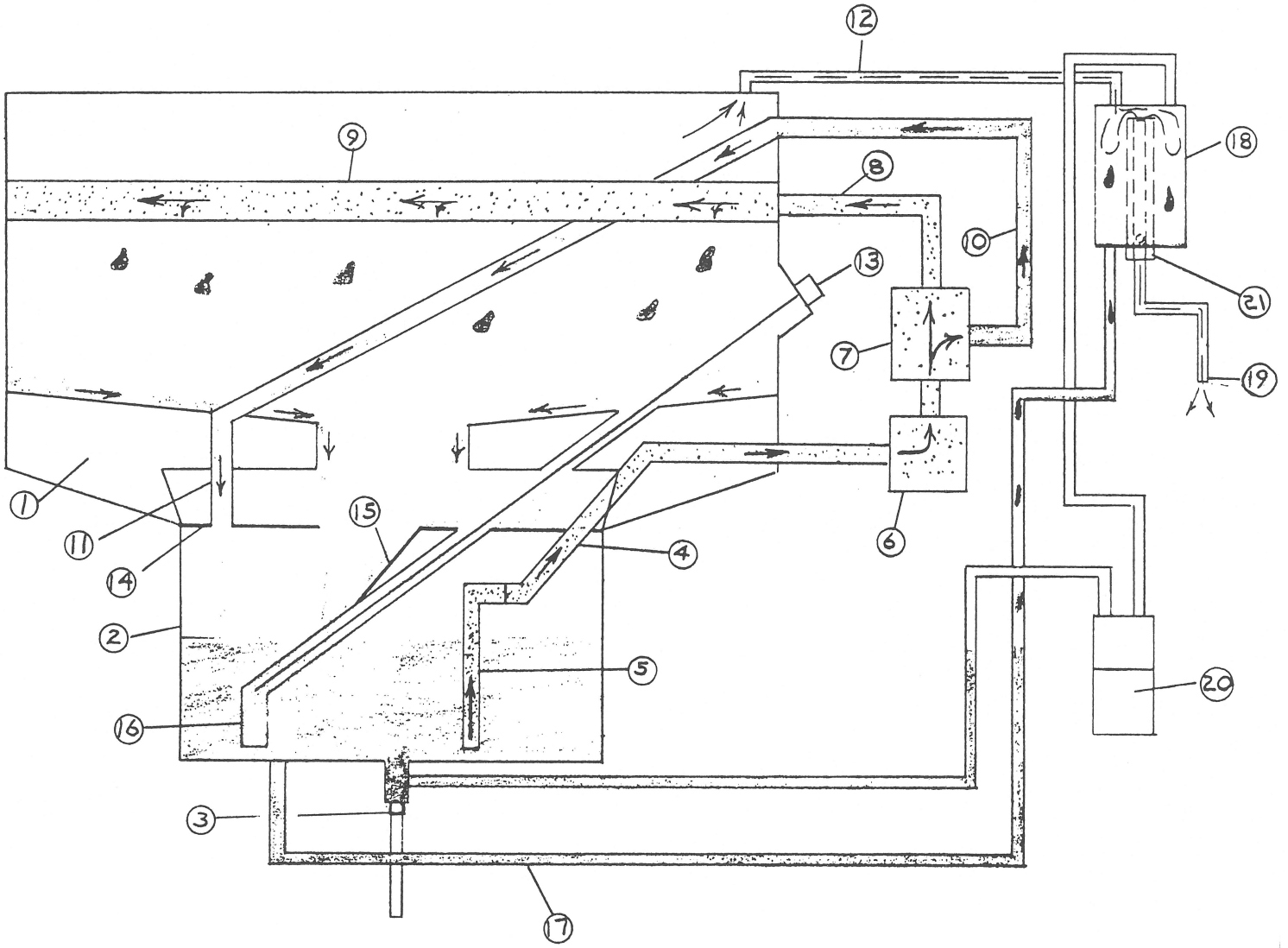

FIGURE 7-6.
SCHEMATIC BREATHER SYSTEM - NORMAL
MODEL 7KCAB (IO-320-E2A or E2B)

FIGURE 7-7.
SCHEMATIC BREATHER SYSTEM INVERTED
MODEL 7KCAB (IO-320-E2A or E2B)

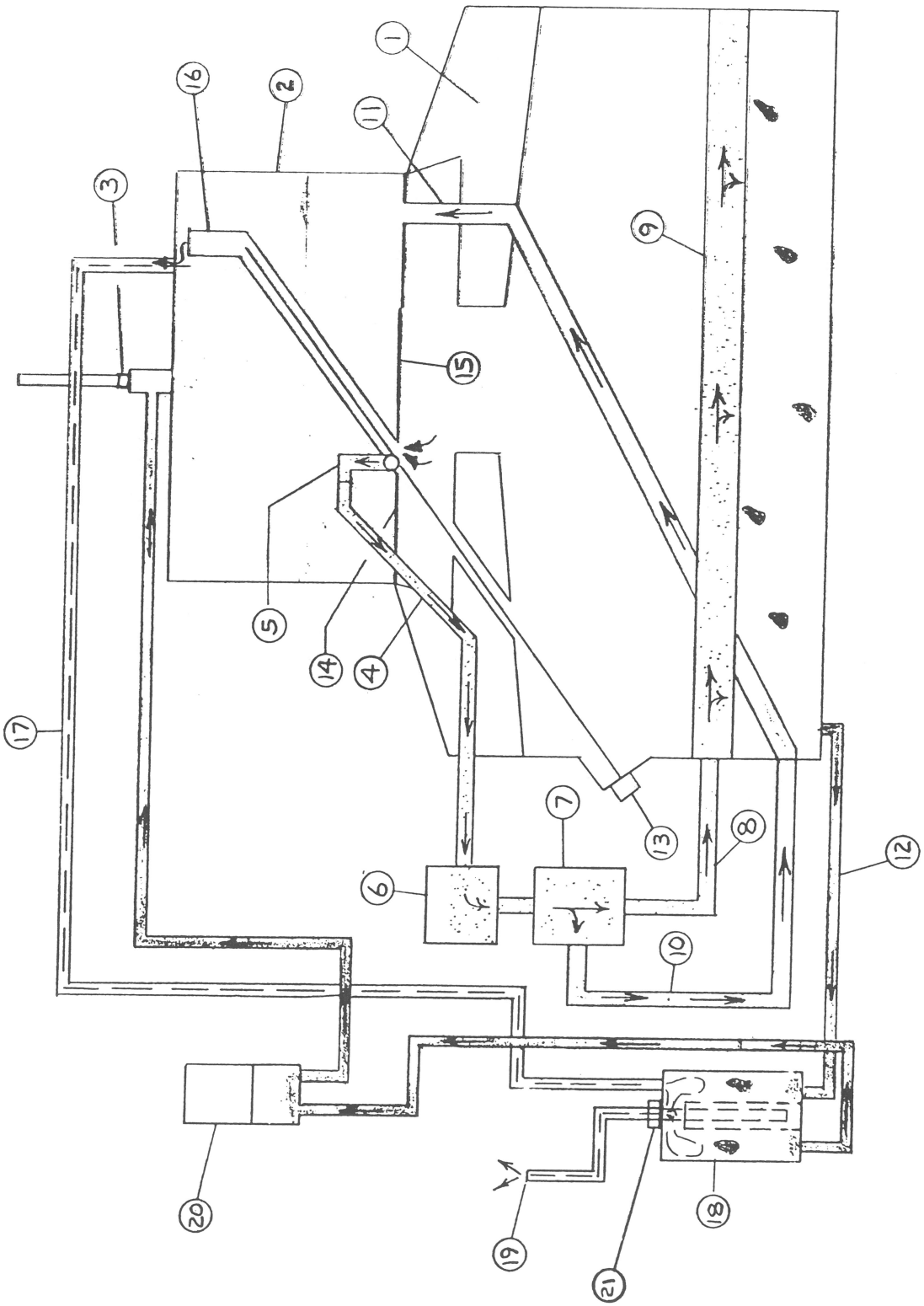

1. ENGINE CRANKCASE
2. OIL SUMP
3. OIL DRAIN & VALVE
4. OIL PICK-UP TUBE
5. SWINGING PICK-UP
6. ENGINE OIL PUMP
7. PRESSURE REGULATOR
8. PRESSURE OIL LINE
9. MAIN BEARINGS, CONNECTING BEARINGS, ETC.
10. BYPASS OIL LINE
11. BYPASS OIL RETURN TUBE
12. NORMAL BREATHER
13. OIL QUANTITY DIPSTICK
14. OIL BAFFLE
15. OIL BAFFLE TRAP DOOR
16. INVERTED BREATHER STANDPIPE
17. INVERTED BREATHER TUBE
18. OIL SEPARATOR
19. BREATHER
20. ELECTRIC PUMP (OPTIONAL)
21. VENT OUTLET ASSEMBLY

b. Remove vent line outlet assembly at 500 hour intervals for cleaning and inspection. Use antisieze compound on threads when reinstalling outlet assembly.

c. Check all connecting lines for condition and blockage at same intervals.

d. Check operation of optional oil breather scavenge pump by removing mercury switches from their housing and with master switch on invert the switches. Pump should operate.

7-24. ENGINE BREATHER SYSTEM (Model 7KCAB) AEIO-320-E2B

The AEIO-320-E2B engine is equipped with Lycoming/Christen oil system. Figures 7-8 and 7-9 show schematics of oil routing and breather system for normal and inverted flight.

Refer to Lycoming operators manual for operating, maintenance and trouble shooting instructions.

For operation in severe cold weather, it is recommended that Service Kit number 264 be installed.

7-25. INVERTED OIL PICK-UP SYSTEM (IN ENGINE SUMP) Model 7KCAB (IO-320-E2A or E2B)

Bellanca Manual #320 supplied with each aircraft details inspection procedures that should be followed at each 400 hour interval.

7-26. TROUBLE SHOOTING

Troubles peculiar to the power plant are listed in Table 7-1 along with their possible causes and suggested remedies. When trouble shooting the engine, ground the magneto primary circuit before performing any checks on the ignition system.

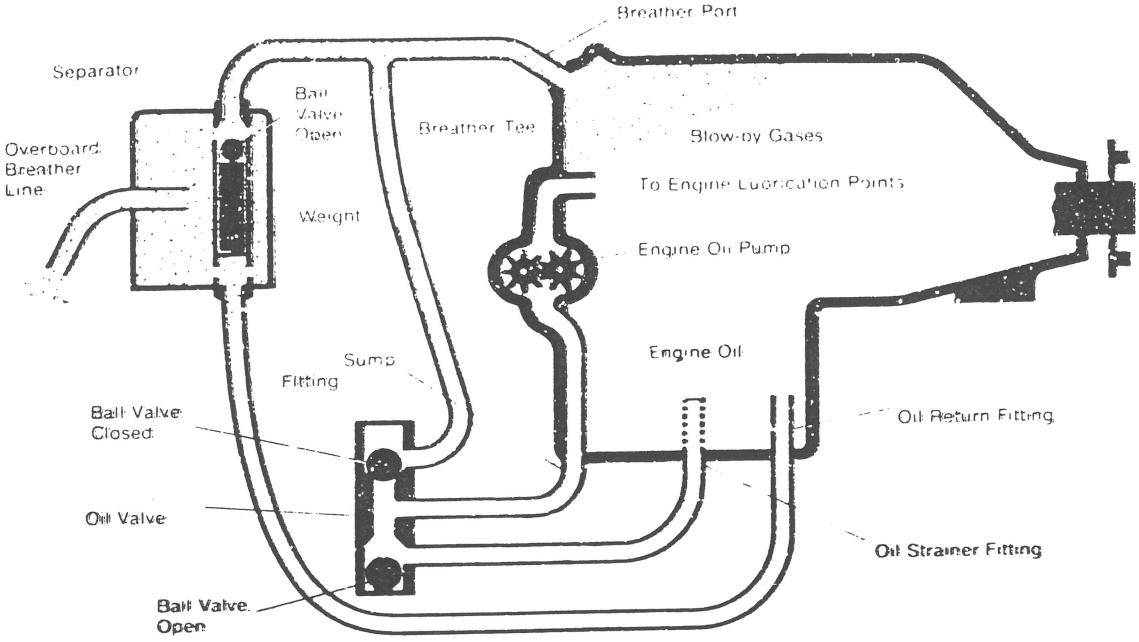

FIGURE 7-8.
SCHEMATIC BREATHER SYSTEM - NORMAL
MODEL 7KCAB
AEIO-320-E2B (CHRISTEN OIL SYSTEM)

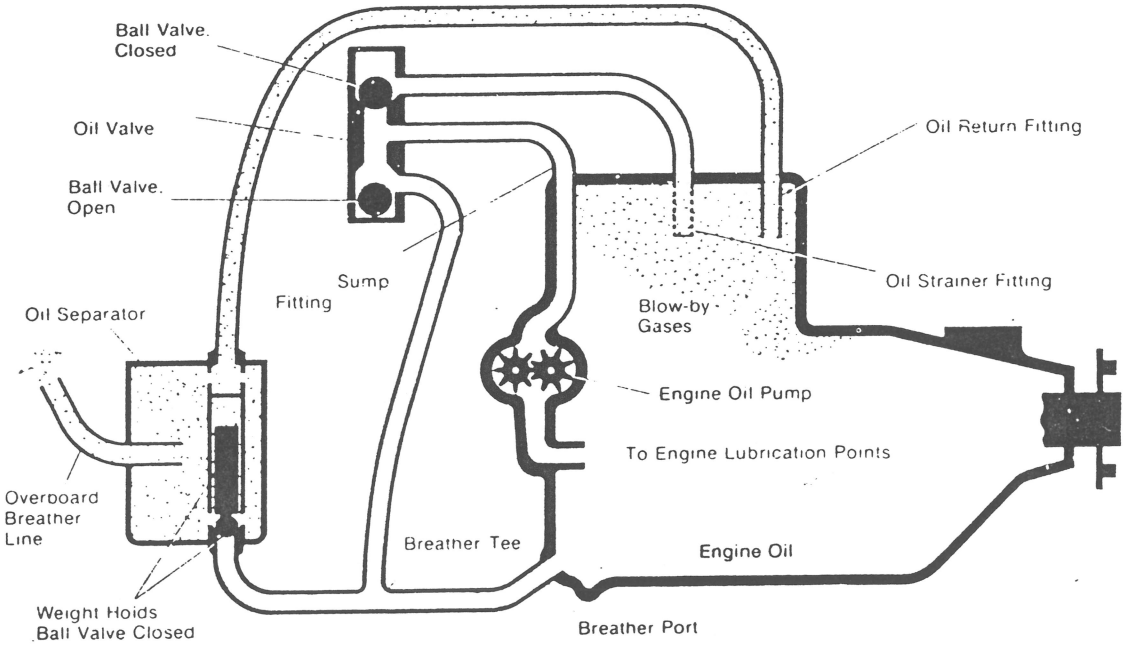

FIGURE 7-9.
SCHEMATIC BREATHER SYSTEM - INVERTED
MODEL 7KCAB
AEIO-320-E2B (CHRISTEN OIL SYSTEM)

TABLE 7-1. ENGINE TROUBLESHOOTING

TROUBLE	CAUSE	REMEDY
Failure of engine to start.	Lack of fuel.	Check fuel system for leaks. Fill fuel tank. Clean dirty lines, strainers, or fuel cocks.
	Underpriming.	Prime with two or three strokes of primer. Prime using electric pump and mixture control. (7KCAB)
	Overpriming.	Open throttle and "unload" engine.
	Incorrect throttle setting.	Open throttle to one-tenth of its range.
	Defective spark plugs.	Clean & adjust or replace spark plug or plugs. Refer to Paragraph 7-18 for spark plug gap adjustments.
	Defective ignition wire.	Check with electric tester and replace any defective wires.
	Improper operation of magneto to breaker points.	Check internal timing of magnetos. Check points.
	Internal failure.	Check oil sump screen for metal particles. If found, complete overhaul of the engine may be indicated.
	Magnetized impulse coupling left magneto only.	Demagnetize impluse couplings.
	Frozen spark plug electrodes.	Replace spark plugs or dry out removed plugs.
	Mixture control in idle cutoff.	Open mixture control.
	Shorted ignition switch or loose ground.	Check and replace or repair.

TABLE 7-1. ENGINE TROUBLESHOOTING

(Con't.)

TROUBLE	CAUSE	REMEDY
Failure of engine to idle properly.	Incorrect idle adjustment.	Adjust throttle stop to obtain correct idle.
	Idle mixture - Injector.	Adjust mixture to give a 25-50 RPM rise @ 700 RPM (7KCAB only)
	Idle mixture.	Refer to Paragraph 7-9 in Engine Manufacturer's Handbook for proper adjustments.
	Leak in the induction system. (Usually able to adjust initial idle but rough in 1000-1500 RPM range.)	Tighten all connections in the induction system. Replace any parts that are defective.
	Plugged nozzles. (7KCAB)	Clean nozzles.
	Low cylinder compression.	Check cylinder compression.
	Unable to lean out idle range.	Replace injector.
	Faulty ignition system.	Check entire ignition system.
	Unable to set and maintain idle.	Replace injector. (7KCAB)
	Improper spark plug setting for altitude.	Check spark plug gap.
	Dirty air filter.	Clean or replace.
Low power and uneven running engine.	Mixture too rich; indicated by sluggish engine operation, red exhaust, flame and black smoke.	See mixture adjustment above.
	Mixture too lean; indicated by overheating or back-firing.	Check fuel lines for dirt or other restrictions. Check fuel supply. Adjust mixture.
	Leaks in induction system.	Tighten all connections. Replace defective parts.
	Defective spark plugs.	Clean or replace spark plugs.

TABLE 7-1. ENGINE TROUBLESHOOTING

(Con't.)

TROUBLE	CAUSE	REMEDY
Low power and uneven running engine. (Con't)	Improper grade of fuel.	Fill tank with recommended grade.
	Magneto breaker points not working properly.	Clean points. Check internal timing of magneto.
	Defective ignition wire.	Check wire with electric tester. Replace defective wire.
	Defective spark plug terminal connectors.	Replace connectors on spark plug wire.
	Restriction in exhaust system.	Check for loose muffler baffles.
	Improper ignition timing.	Check magnetos for timing and synchronization.
	Injector out of adjustment. (7KCAB)	Replace injector.
	Flow divider obstructed. (7KCAB)	Clean flow divider.
Failure of engine to develop full power.	Throttle lever out of adjustment.	Adjust throttle lever.
	Leak in induction system.	Tighten all connections, and replace defective parts.
	Restriction in carburetor or air scoop.	Examine air scoop and remove restrictions.
	Improper fuel.	Fill tank with recommended fuel.
	Injector out of adjustment. (7KCAB)	Replace injector.
	Flow divider obstructed. (7KCAB)	Clean flow divider.
	Faulty ignition.	Tighten all connections. Check system. Check ignitic timing.

TABLE 7-1. ENGINE TROUBLESHOOTING

(Con't.)

TROUBLE	CAUSE	REMEDY
Rough running engine.	Cracked engine mounts.	Repair or replace engine mount.
	Unbalanced propeller.	Remove propeller and have it checked for balance.
	Bent propeller blades.	Check propeller for track. Max. 1/8"
	Defective mounting.	Install new mounting bushings.
	Lead deposit on spark plug.	Clean or replace plugs.
	Malfunctioning engine.	Check entire engine.
Low oil pressure.	Insufficient oil.	Check oil supply.
	Dirty oil screen.	Remove and clean oil screen.
	Defective pressure gauge.	Replace gauge.
	Air lock or dirt in relief valve.	Remove and clean oil pressure relief valve.
	Leak in suction line or pressure line.	Check gasket between accessory housing crankcase.
	High oil temperature.	See "High Oil Temperature" in Trouble Column.
	Stoppage in oil pump intake passage.	Check line for obstruction. Clean suction screen.
	Worn or scored bearings.	Overhaul.
High oil temperature.	Insufficient air cooling.	Check air inlet and outlet for deformation or obstruction.
	Insufficient oil supply.	Fill oil sump to proper level.
	Clogged oil lines or screen.	Remove and clean oil screen.
	Failing or failed bearing.	Examine sump for metal particles and if found, overhaul engine.
	Defective thermostats.	Replace.
	Defective temperature gauge.	Replace gauge.

TABLE 7-1. ENGINE TROUBLESHOOTING

(Con't.)

TROUBLE	CAUSE	REMEDY
High oil temperature (Con't)	Excessive blow-by.	Usually caused by weak or stuck rings. Overhaul.
	Improper engine operation.	Check entire engine.
Excessive oil consumption.	Failing or failed bearing.	Check sump for metal particles and if found, overhaul of engine is indicated.
	Worn or broken piston rings.	Install new rings.
	Incorrect installation of piston rings.	Install new rings.
	External oil leakage.	Check engine carefully for leaking gaskets, "O" rings or sand holes.
	Leakage through engine fuel pump vent.	Replace fuel pump.
	Engine breather or vacuum pump breather.	Check engine and overhaul or replace pump.
Inaccurate pressure readings.	Cold weather.	In extremely cold weather oil pressure readings up to 100 pounds do not necessarily indicate malfunctioning.
Overpriming.	Cold weather.	Open throttle and unload engine.
Inaccurate pressure	Cold weather.	High or low pressure readings due to extremely cold weather are not necessarily a malfunction. Small and long oil lines will not transfer pressure readings accurately until engine is quite warm.
Cold weather difficulties.	Cold oil.	Move aircraft into a heated hangar. Heat oil.
	Inaccurate pressure readings.	In extreme cold weather, oil pressure readings up to approximately 100 lbs. do not necessarily mean malfunctioning.

TABLE 7-1. ENGINE TROUBLESHOOTING

(Con't.)

TROUBLE	CAUSE	REMEDY
Cold weather difficulties. (Con't)	Overpriming.	Rotate crankshaft in direction of normal rotation with throttle "full open" and mixture in "Idle-cut-off" and ignition switch "OFF".
	Weak battery.	Install fully charged battery.
	Faulty ignition switch.	Check ground wires.
Poor cut-off.	Mixture control valve scored or not seating properly.	Eliminate cause of scoring (usually burr or dirt) and lap mixture control valve and plug on surface plate.

SECTION 8

FUEL SYSTEM

		PAGE
8-1.	GENERAL	8-2
8-2.	FUEL TANK REMOVAL	8-5
8-3.	FUEL TANK INSTALLATION	8-5
8-4.	FUEL VENT SYSTEM	8-6
8-5.	FUEL GAUGE - GENERAL	8-7
8-6.	FUEL GAUGE REMOVAL	8-7
8-7.	FUEL GAUGE INSTALLATION	8-7
8-8.	CALIBRATING FUEL SYSTEM	8-10
8-9.	FLUSHING THE FUEL SYSTEM	8-10
8-10.	FUEL STRAINER	8-12
8-11.	CARBURETOR OR INJECTOR INLET SCREEN	8-12
8-12.	ENGINE PRIMER SYSTEM - GENERAL	8-12
8-13.	PRIMER PUMP	8-12
8-14.	PRIME JETS	8-14
8-15.	EMERGENCY ELECTRIC FUEL PUMP (WELDON 8110-C) MODEL 7KCAB	8-14
8-16.	ENGINE DRIVEN FUEL PUMP (MODEL 7KCAB)	8-15
8-17.	HEADER TANK (MODEL 7KCAB)	8-15

SECTION 8

FUEL SYSTEM

8-1. GENERAL

a. Models 7ECA, 7GCAA, 7GCBC (See Figure 8-1)

The fuel system consists of two tanks, one in the butt end of each wing. The tanks are interconnected thru front and rear manifolds. Fuel is supplied from either tank to the manifolds, thru the fuel shut-off valve, fuel strainer and to carburetor. Note: Fuel caps are of the nonvented type and at no time should the vented type be substituted.

b. Model 7KCAB (See Figure 8-2)

The fuel system consists of two tanks, one in the butt end of each wing. The tanks are interconnected thru a 1 1/2 gallon header tank at forward end and a manifold at aft end. The header tank (3/4 gallon useable), located beneath the instrument panel, receives all fuel from main tanks by gravity and serves as fuel supply for limited inverted operation. Fuel is pumped from the center of the header tank thru the shut-off valve, electric fuel pump, mechanical engine driven pump and to injector. Note: Fuel caps are of the nonvented type and at no time should the vented type be substituted.

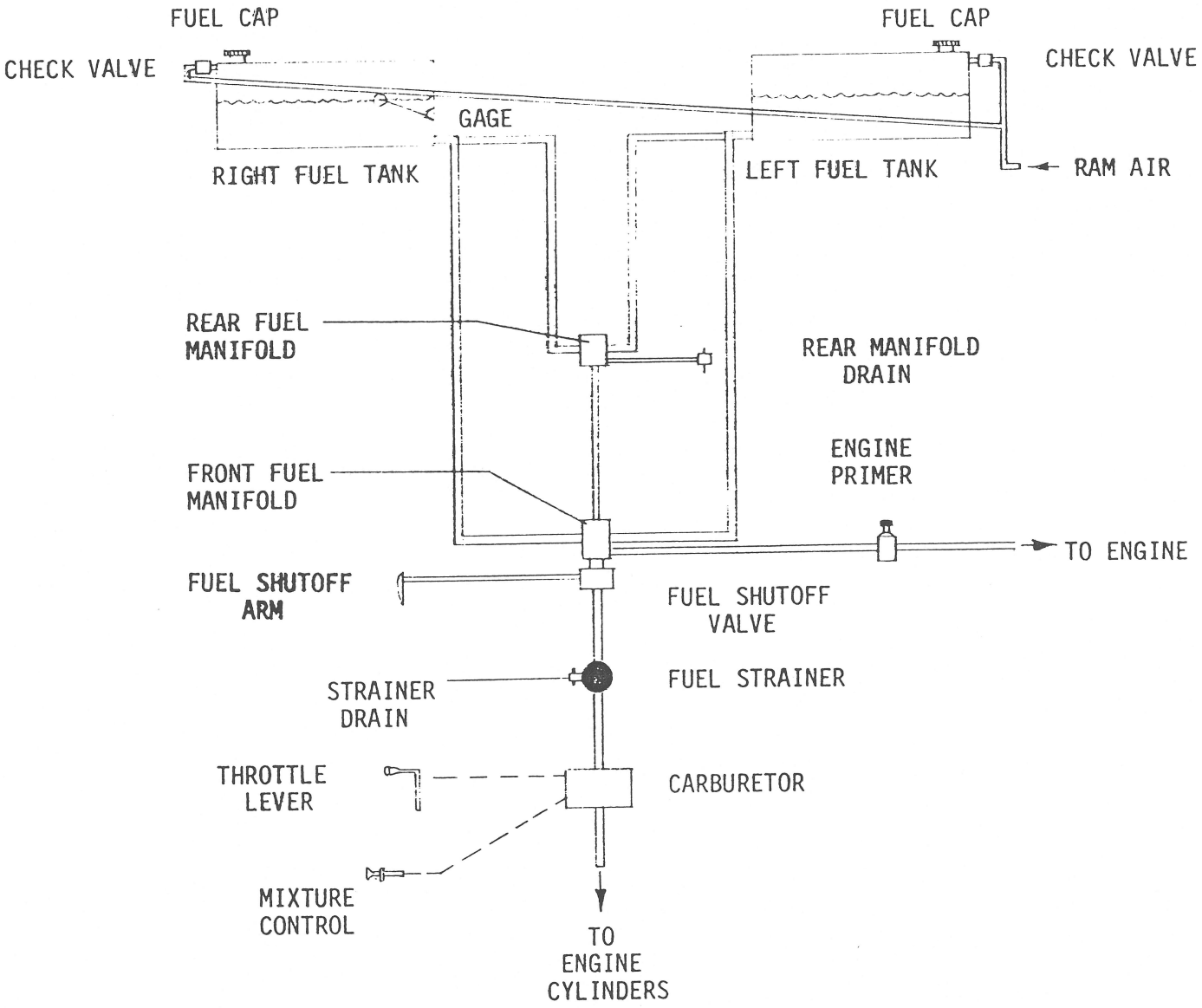

FIGURE 8-1.

SCHEMATIC FUEL SYSTEM
MODELS 7ECA, 7GCAA, 7GCBC

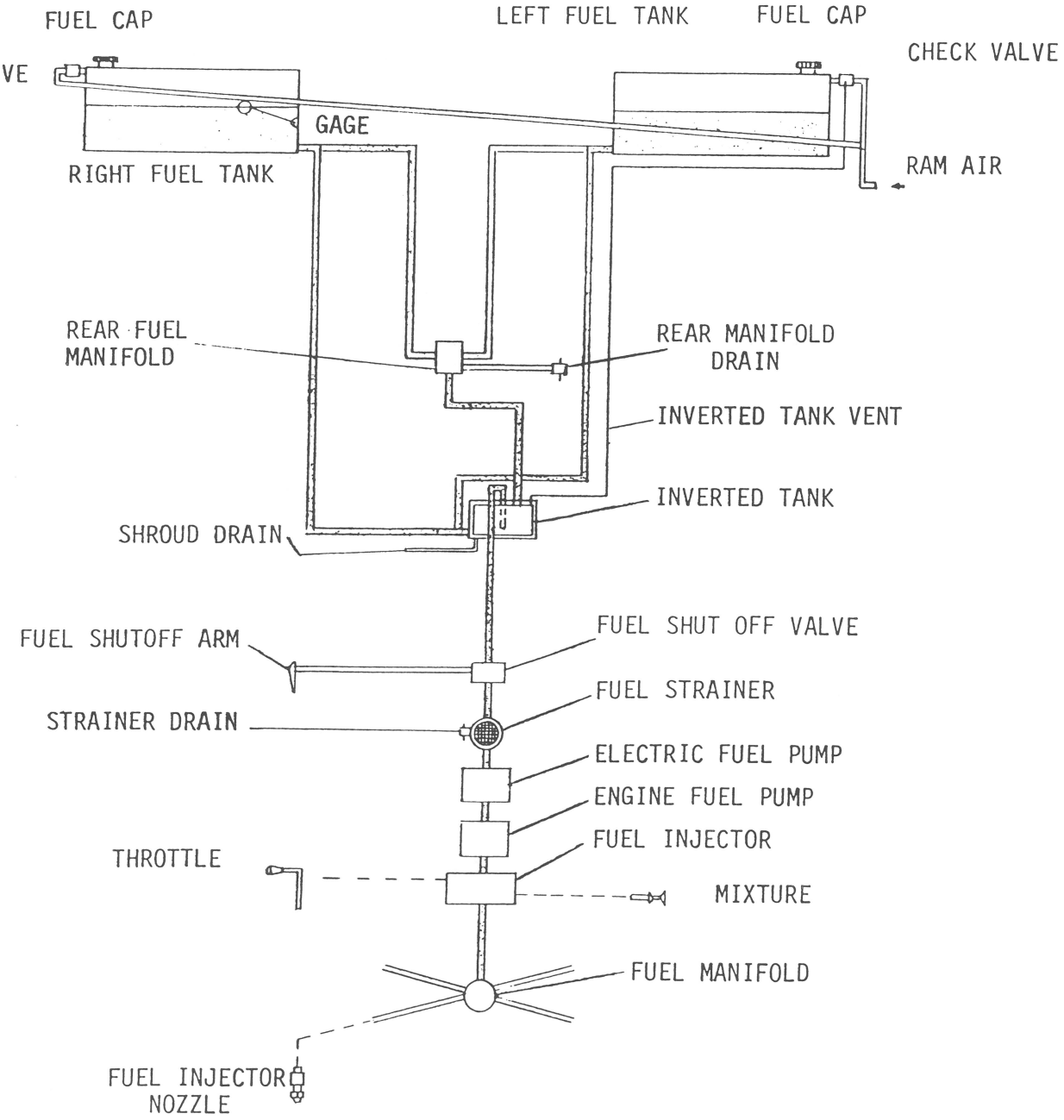

FIGURE 8-2.
SCHEMATIC - FUEL SYSTEM
MODEL 7KCAB

8-2. FUEL TANK REMOVAL (See Figure 8-3) 18 gallon fuel tank
(See Figure 8-4) 13 gallon fuel tank

a. Drain fuel system at front and rear fuel manifolds.

b. Remove fuselage-wing gap covers.

c. Remove fabric from top of wing completely, starting at the wing butt to inbr'd. edge of outbr'd. tank rib and from wing trailing edge forward to spar.

> CAUTION
>
> Before removing fabric, remove tapes over the three ribs above and below tank. Drill out rivets (#30 drill). Be careful not to drill thru rib into tank or to elongate hole in rib. Tank is .38 in. below rib flange.

d. Disconnect front and rear fuel lines in gap area.

e. Disconnect vent line and check valve block thru lower inspection cover outboard of tank.

f. Remove hardware attaching drag wires to wing butt fittings - front and rear, leaving jam nuts locked on outboard ends of drag wires. (As not to disturb wing tram.)

g. Remove tank. On 18 gallon tanks, lift forward edge of tank to release from wing tank saddles, pull tank toward wing butt.

8-3. FUEL TANK INSTALLATION

a. Inspect fuel tank for shipping or storage damage.

b. Install fuel tank in reverse order of removal. Reconnect all lines.

c. Check all fabric attach holes size for elongation. Maximum hole diameter is .147 in. If hole is oversize, redrill #30 (.128) in rib 1/2 inch either side of oversize hole.

d. Install fabric, lap fabric at trailing edge of wing. Lap fabric 1 inch minimum over first rib outboard of tank and 2 inch minimum on forward edge past spar. Glue fabric to butt, trailing edge and top of leading edge. Dope outboard edge of fabric to existing fabric. Shrink fabric with household iron set at wool temperature. (Maximum temperature 350°F) Install and dope 3/4 inch tape over ribs on fabric. Install rivets in existing holes and dope 3 inch tapes to fabric over 3 tank ribs. Drill #30 (.1285) holes and install rivets between each existing rivet on first rib outboard of tank. Dope 3 inch tape over outboard rib.

e. Dope and finish fabric.

f. Install gap covers.

8-4. FUEL VENT SYSTEM (See Figure 8-5 or 8-6)

a. On 18 gallon fuel tanks, (See Figure 8-5) the fuel vent system consists of inter-connected lines between tanks. Check valves are located at outboard ends of each tank. Ram air pressure is obtained from forward pointing vent below the left wing. Maintenance of the system is unnecessary except to check for leaks, plugged lines or inoperative check valves. Model 7KCAB utilizes a 1/8 header tank vent which terminates at left tank check valve.

b. On 13 gallon wing tank,(See Figure 8-6) the fuel vent system consists of inter-connected lines between tanks. Ram air pressure is obtained from vent above top left wing root fairing. Maintenance of the system is unnecessary except to check for leaks and plugged lines.

8-5. FUEL GAUGE - GENERAL

The fuel gauge indicating system consists of a nut, glass and two gaskets and gauge assembly. On aircraft equipped with a Rochester gauge, the unit consists of a sealed gauge assembly, gasket and four attach screws.

8-6. FUEL GAUGE REMOVAL

a. Remove fuel gauge tunnel (plastic). Remove outside nut. (CAUTION: Nut is made of aluminum) Pull glass, gaskets and gauge assembly out. Note order of removal.

b. On aircraft equipped with a Rochester gauge, remove four attach screws and pull out gauge assembly.

8-7. FUEL GAUGE INSTALLATION

a. Install in reverse order of removal. A small amount of grease should be put on gauge retaining nut or screws to prevent seizing to tank flange.

b. Gauge to be installed parallel with tank and to read slightly less than "0" when empty.

On aircraft equipped with Rochester gauges and float resting on bottom of tank gauge should read to bottom of red mark. Gauge may be adjusted by bending float arm as necessary.

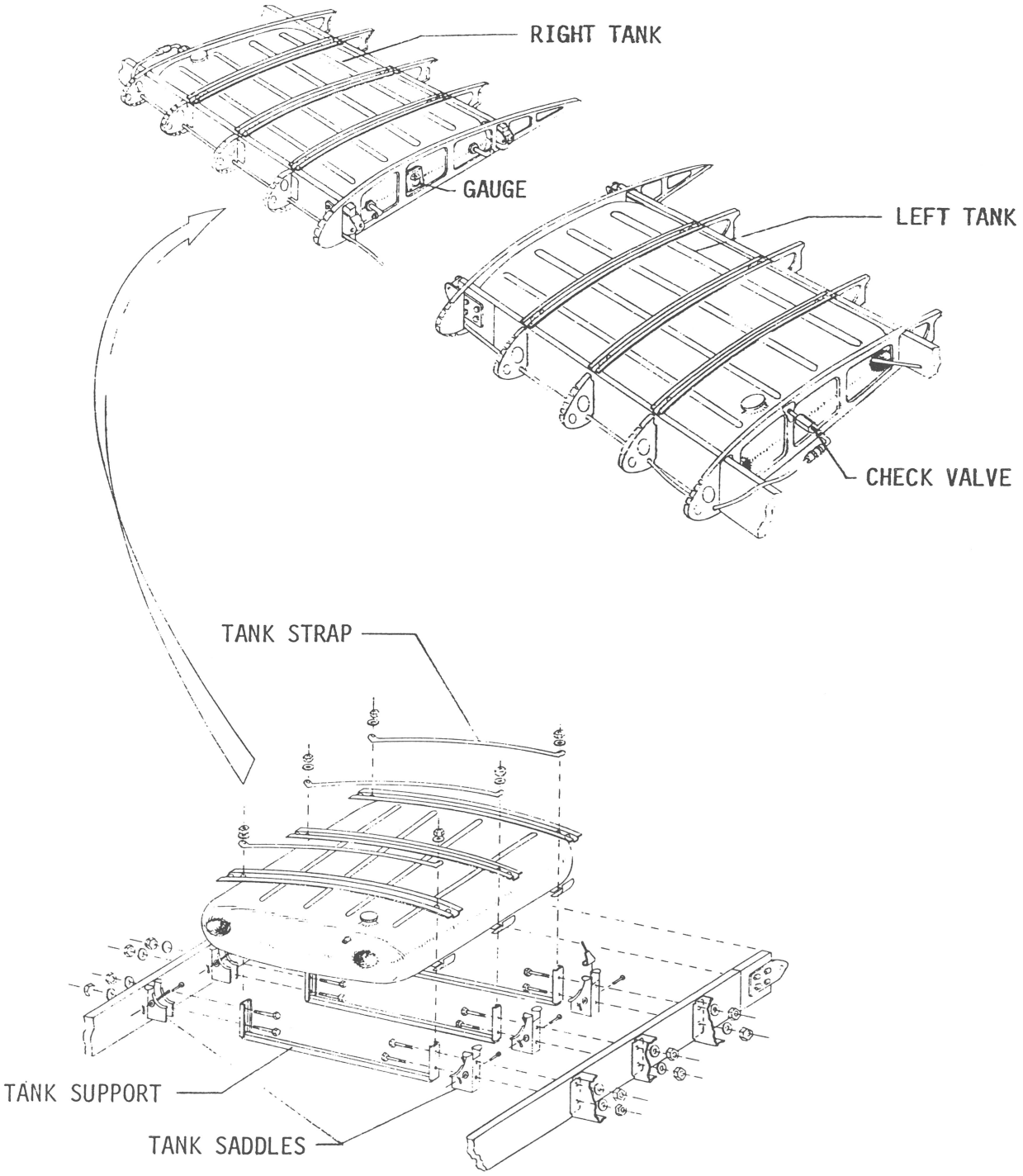

FIGURE 8-3.

INSTALLATION - FUEL TANK (18 GALLON)

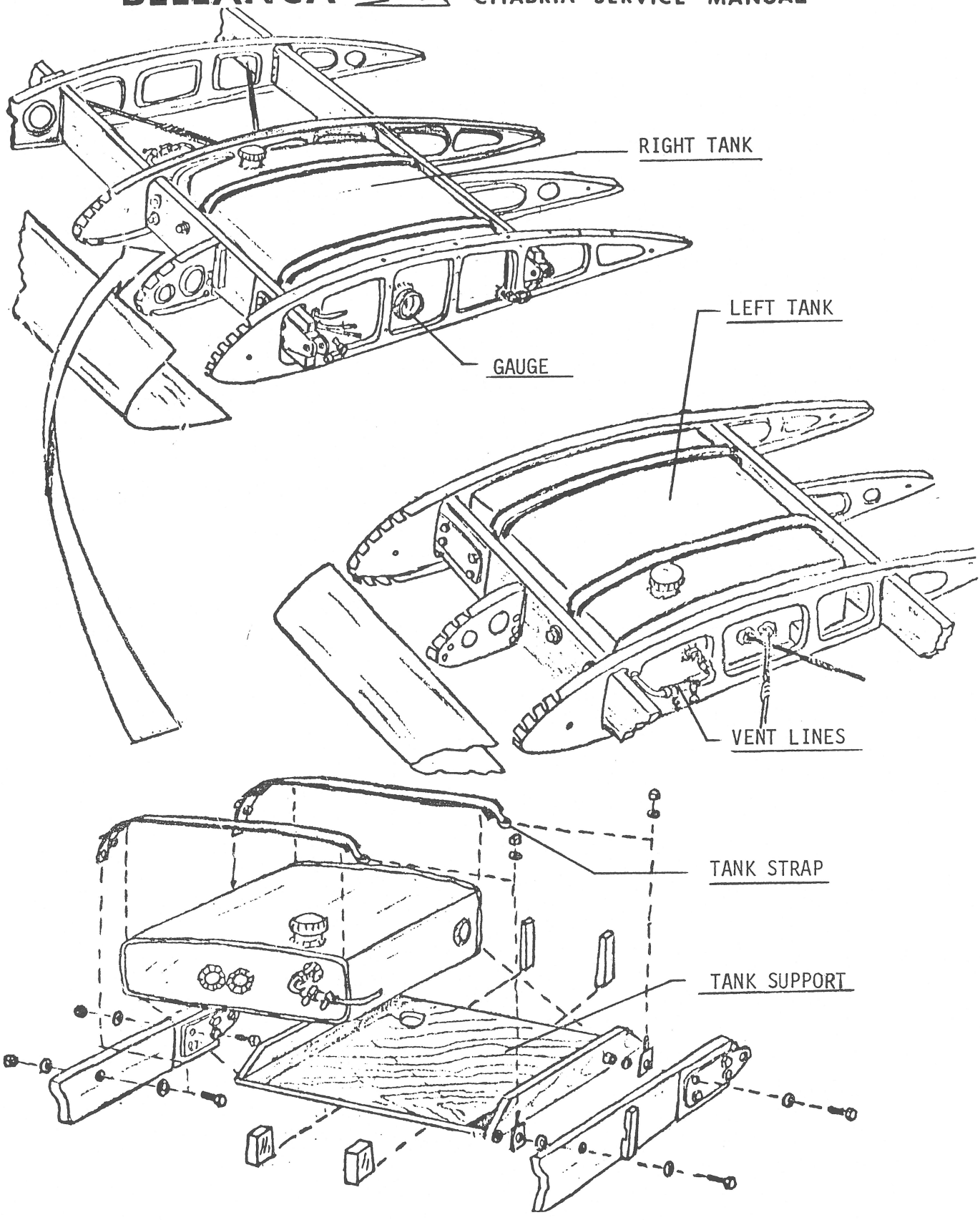

FIGURE 8-4.
INSTALLATION FUEL TANK (13 GALLON)

8-8. CALIBRATING FUEL SYSTEM

a. Airplane must not be level longitudinally and laterally. (Refer to leveling Section 2-5.)

b. Fill fuel tank by:

1. Fill right tank to 0 or bottom of E mark.
2. Fill left tank with like amount.
3. Fill right tank to 1/4.
4. Fill left tank with like amount.
5. Fill right tank to 1/2.
6. Fill left tank with like amount.
7. Fill right tank to 3/4.
8. Fill left tank with like amount.
9. Fill right tank to full.
10. Fill left tank with like amount.

Record total gallonage at each mark.

c. When calibrating an 18 or 20 gallon tank, gauge should indicate within plus or minus 10% of tank capacity at 1/2, 3/4 and full readings, plus or minus 5% at 1/4 and no less than 1/2 gallon per side at "0" reading. When calibrating at 13 gallon wing tank, variations as above will apply except that a "0" reading approximately 1 1/2 gallons should be in each tank.

8-9. FLUSHING THE FUEL SYSTEM

a. To flush fuel system open rear drain valve, front drain on sediment bowl and remove tank drains.

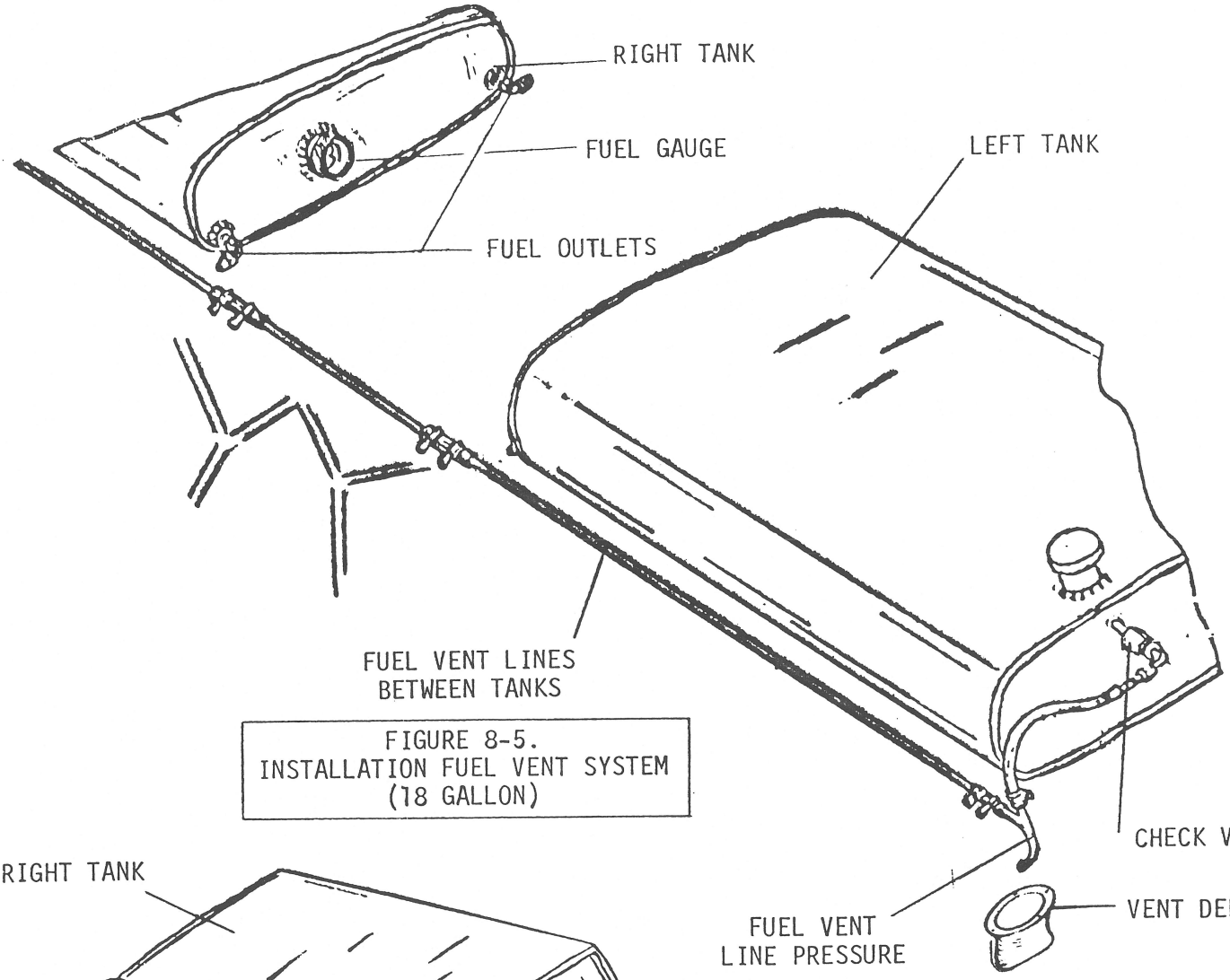

FIGURE 8-5.
INSTALLATION FUEL VENT SYSTEM
(18 GALLON)

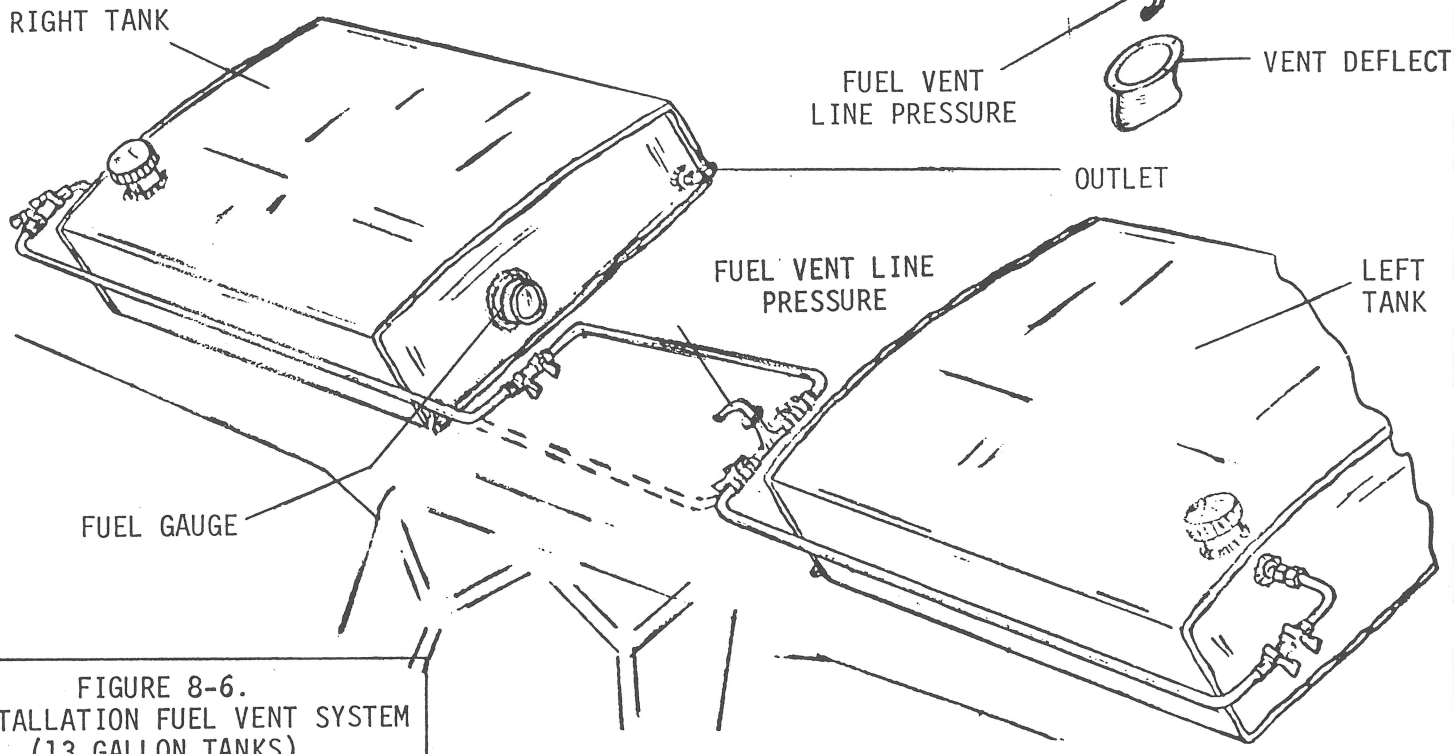

FIGURE 8-6.
INSTALLATION FUEL VENT SYSTEM
(13 GALLON TANKS)

b. Flush enough fuel through the system until it is determined that the system is clean.

8-10. FUEL STRAINER

a. Close fuel shut off valve.

b. To remove sediment bowl and screen, remove safety, loosen bowl clamp (Pre 1974) or remove lower bowl nut (Gerdes).

c. Remove and clean screen, gaskets or "O" rings. Check for damage.

d. Reinstall in reverse order of removal and safety.

e. Turn on fuel shut off valve to determine that bowl seal is not leaking.

8-11. CARBURETOR INJECTOR INLET SCREEN

a. Refer to Power Plant Section 7-12 maintenance care.

8-12. ENGINE PRIMER SYSTEM - GENERAL (Models 7ECA, 7GCAA, 7GCBC)

The engine primer system consists of a hand operated primer pump, supply lines and primer jets. Fuel for the priming system is taken from the front fuel manifold. Fuel is directed through the pump, supply lines and on to the jets located at induction port of both rear cylinders. Maintenance to the system is unnecessary, except at engine overhaul or when irregular starting is encountered caused by one or both jets being plugged and/or the primer pump is dirty or leaking.

8-13. PRIMER PUMP (Refer to Figure 8-7)

a. To check the flow of the pump, disconnect the supply line

within the engine compartment where the line divides to go to the left and right cylinders. Operate the pump; sufficient fuel should flow to supply all jets and is determined by the amount of pressure exerted on the pump knob. When operating the knob, check for leakage around the piston.

b. The pump should be removed from the aircraft for servicing. This is accomplished by disconnecting the supply lines at the pump, loosening the lock nut from behind the panel, turning off the face nut, withdrawing the piston from the pump body and removing the pump from the panel.

c. Further disassemble the pump and clean with solvent to remove built up foreign deposits. Ascertain that the two check balls are free to operate and seat properly. Replace the piston "O" rings and lubricate with motor oil before inserting into pump body. If excess pump wear is indicated, replace.

d. To check the pump operation before reinstalling assembly, immerse in gasoline and pump several times to ascertain proper operation.

e. To reinstall pump, insert the pump body through the panel, install the piston assembly and secure the face nut. Position the pump and secure the lock nut behind the panel. Connect the supply lines.

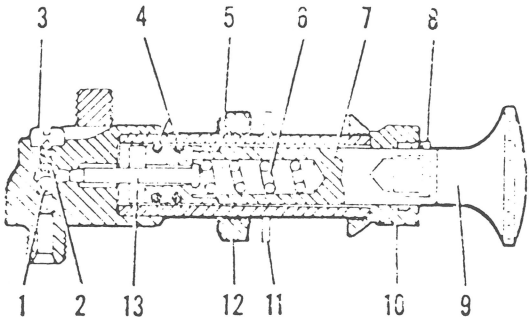

1. CHECK BALL
2. BALL SPRING
3. RETAINER SCREW
4. "O" RINGS
5. CYLINDER
6. SEALING SPRING
7. PISTON
8. STOP PIN
9. PUMP HANDLE
10. FACE NUT
11. WASHER
12. LOCK NUT
13. SEALING PIN

FIGURE 8-7.
PRIMER PUMP

8-14. PRIME JETS

a. To remove the prime jets, disconnect the supply line from each jet. With a deep socket and light pressure, remove the jet from the cylinder.

b. To clean the jet, soak in a carbon remover solution long enough to loosen any dirt and blow clean with air pressure. Do not use sharp objects or wire brush to clean the jet tube.

c. Install the jet finger tight to assure that the threads are not crossed and then torque 60 to 125 inch pounds. Align and install the fuel supply lines, tighten to a snug fit.

Note: Should further fuel stoppage of the primer system exist, check the supply lines for stoppage, bent or collapsed walls.

8-15. EMERGENCY ELECTRIC FUEL PUMP (WELDON 8110-C) Model 7KCAB

The emergency fuel pump is electric driven and is located on the right forward side of firewall. This pump is connected

in series with the engine driven pump. When the engine pump is operating normally and the emergency pump is off, fuel is being drawn thru the emergency pump. With the engine stopped, the electric pump should deliver approximately 20 psi of pressure.

For pump servicing if inoperative or delivering less than 12 psi, contact Weldon Tool Co., Cleveland, Ohio or replace pump.

8-16. ENGINE DRIVEN FUEL PUMP (Model 7KCAB)

The engine driven fuel pump is a high pressure dual diaphram AC type JT pump and should not be replaced with any other model. Normal operating pressure is approximately 23 psi; however, acceptable operating range is 12 to 45 psi.

8-17. HEADER TANK (Model 7KCAB)

The header tank fuel pickup tube should extend into the tank from top of tightened attach nut 5.31 in. A vent line is connected to the tank top and routed back to the left main tank.

If the entire fuel system is drained and a small amount of fuel is then added, some time will be necessary before the header tank will fill. Set the aircraft in level attitude or add more fuel before attempting an engine start. The header tank vent line should be checked for opening if fuel pressure is lost upon initial inverted operations.

TABLE 8-1. FUEL SYSTEM TROUBLESHOOTING

TROUBLE	CAUSE	REMEDY
Fuel gauge fails to indicate.	Out of gas.	Fill tanks.
	Gauge not operating.	Replace fuel gauge.
	Float operation partially or completely blocked.	Replace gauge or determine cause of blockage.
Fuel differential from tank to tank.	Loose cap, poor seal.	Tighten caps or replace caps.
	Check valve inoperative.	Replace or service valve.
	Vent line plugged.	Clear vent line.
	Aircraft out of rig directionally.	Correct rigging.
	Vent line leakage.	Correct leakage.
Unidentified leaks.	Fuel lines damaged or improperly installed.	Locate & repair or tighten.
Gas stains on bottom or trailing edge of wing.	Leaking tank.	Remove & replace or repair.
	Cap seal leaking.	Replace cap.
Fuel fails to drain from gascolator.	Moisture frozen in gascolator or fuel lines.	Place in heated hangar until fuel flows. Drain until all evidence of moisture is gone.
	Stoppage of fuel strainer at gascolator.	Clean fuel strainer.
Fuel is the wrong color.	Tanks filled with the wrong type fuel.	Drain the fuel system and fill with proper octane fuel.
Fuel pressure low. (Model 7KCAB)	Faulty fuel pump.	Replace pump.
	Obstructions in fuel system.	Locate and remove obstruction.

SECTION 9

ELECTRICAL SYSTEM

		PAGE
9-1.	GENERAL	9-2
9-2.	ELECTRICAL SYSTEM TROUBLESHOOTING	9-7
9-3.	ALTERNATOR SYSTEM SERVICE PROCEDURES	9-11
9-4.	GENERAL	9-11
9-5.	CAUTION	9-12
9-6.	VISUAL INSPECTION	9-12
9-7.	MASTER SWITCH	9-12
9-8.	OVERVOLT RELAY	9-13
9-9.	REGULATOR	9-13
9-10.	ALTERNATOR AND REGULATOR	9-13
9-11.	TESTING THE REGULATOR	9-14
9-12.	TESTING THE REGULATOR	9-15

SECTION 9

ELECTRICAL SYSTEM

9-1. GENERAL

Electrical power for the Citabria is supplied by a 12 volt, direct current, single wire, negative ground electrical system. A 12 volt battery is incorporated in the system to furnish power for starting and a reserve power source in case of alternator failure.

The system has a 40 or 60 ampere alternator. Charging is controlled by a voltage regulator in the field circuit. Also in the field circuit is a master switch and overvoltage protector relay.

The alternator is located on the front lower right side of the engine and utilizes a belt drive from the engine crankshaft. The voltage regulator and the overvoltage relay are located on the engine firewall.

All electrical switches are located on the upper left hand side of the cabin above the left front window.

Figure 9-2 shows a schematic diagram of the complete electrical system for Models 7ECA, 7GCAA & 7GCBC. Figure 9-2A shows a schematic diagram of the complete electrical system for Models 7ECA, 7GCAA & 7GCBC equipped with internal grounded alternator. (P/N ALY-8420G) Note serial number effectivity. Figure 9-1 shows a schematic diagram of the complete electrical system for Model 7KCAB. Figure 9-1A shows a schematic diagram of the complete electrical system for Model 7KCAB with internal grounded alternator. (P/N ALY-8420G) Note serial number effectivity.

FIGURE 9-1.
ELECTRICAL SCHEMATIC
MODEL 7KCAB

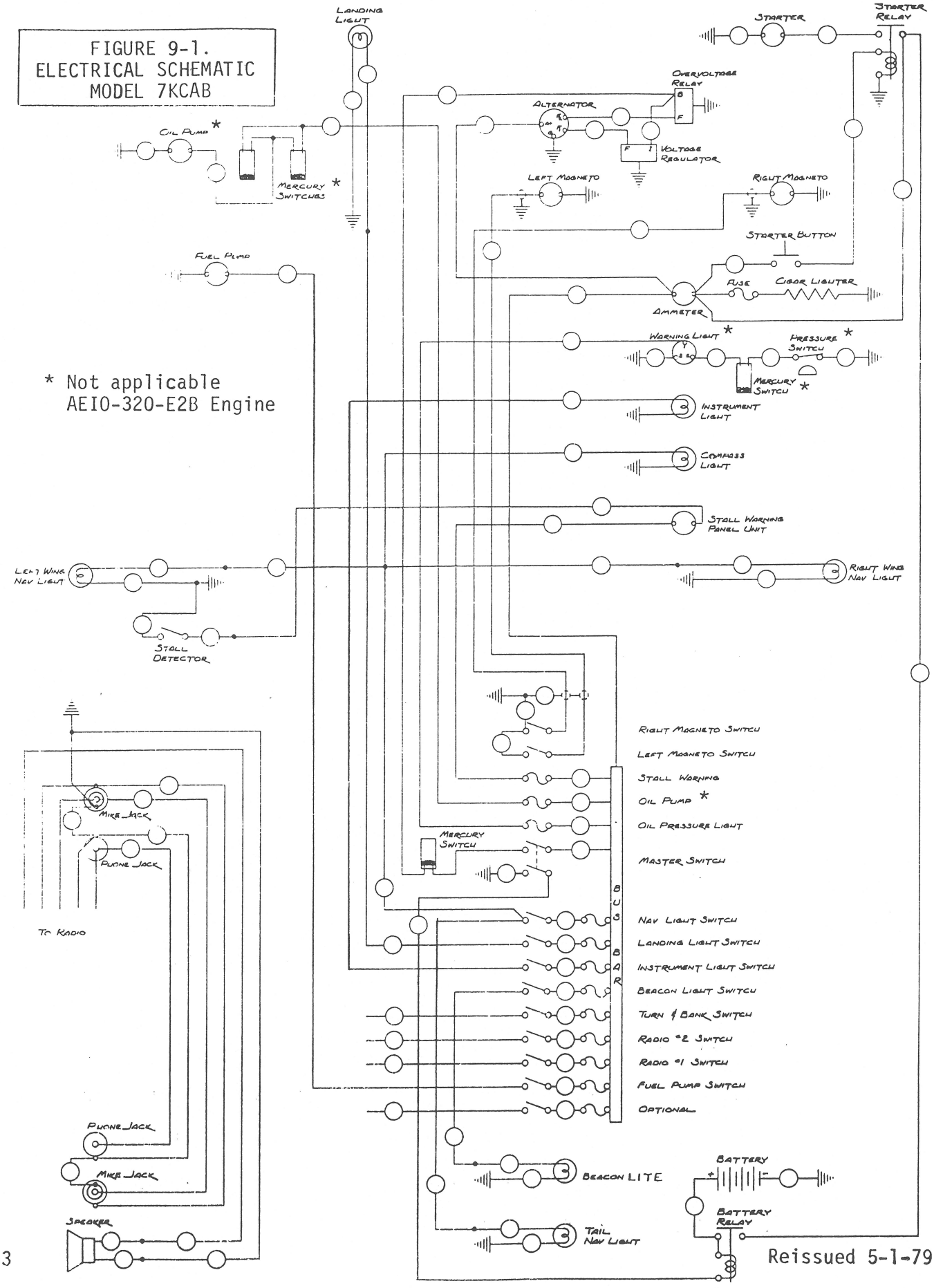

* Not applicable
AEIO-320-E2B Engine

FIGURE 9-1A
ELECTRICAL SCHEMATIC - MODEL 7KCAB
APPLICABLE SERIAL NO'S. 596-76
THRU 608-77, 610-77 AND UP

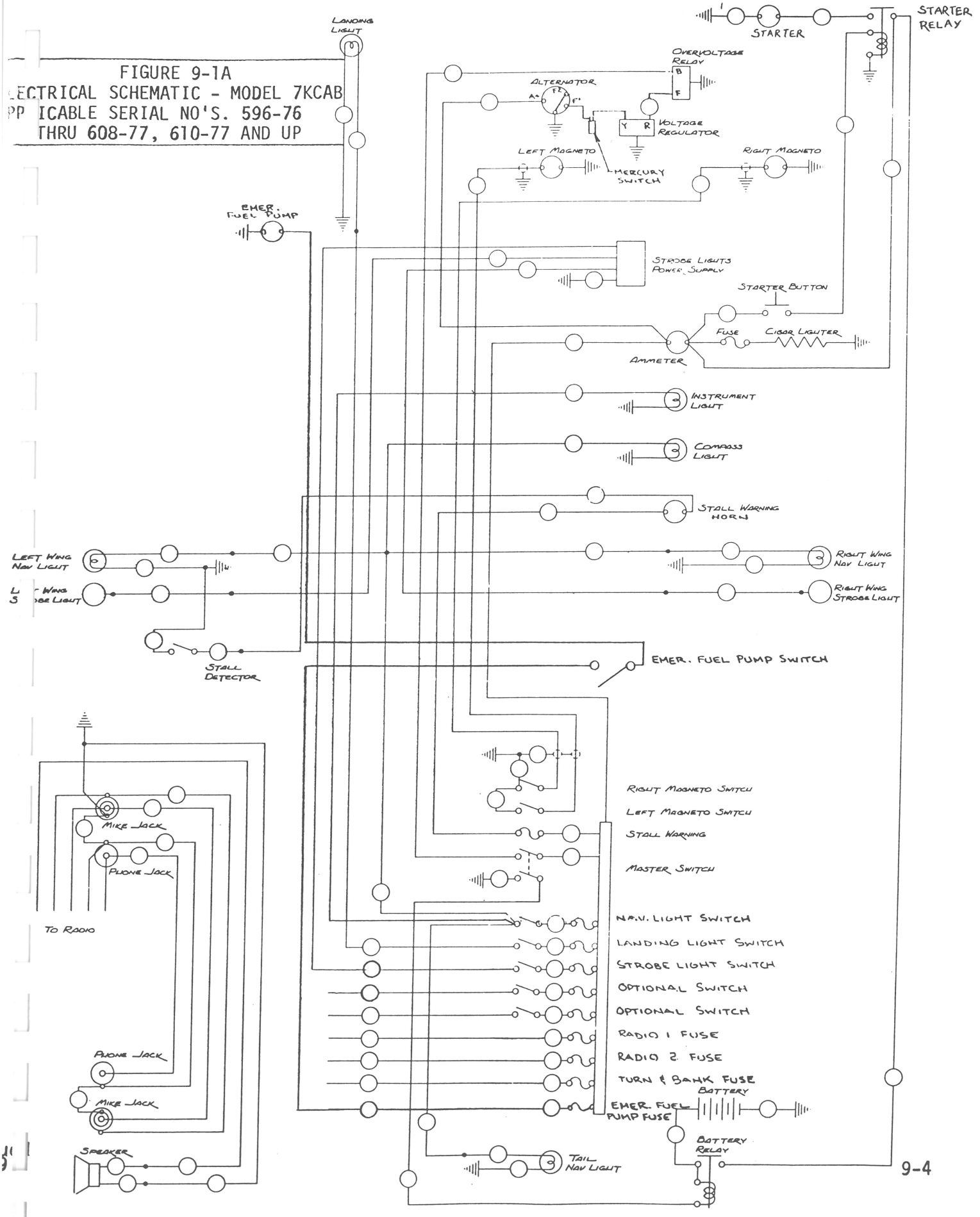

FIGURE 9-2.
ELECTRICAL SCHEMATIC
MODELS 7ECA, 7GCAA, 7GCBC

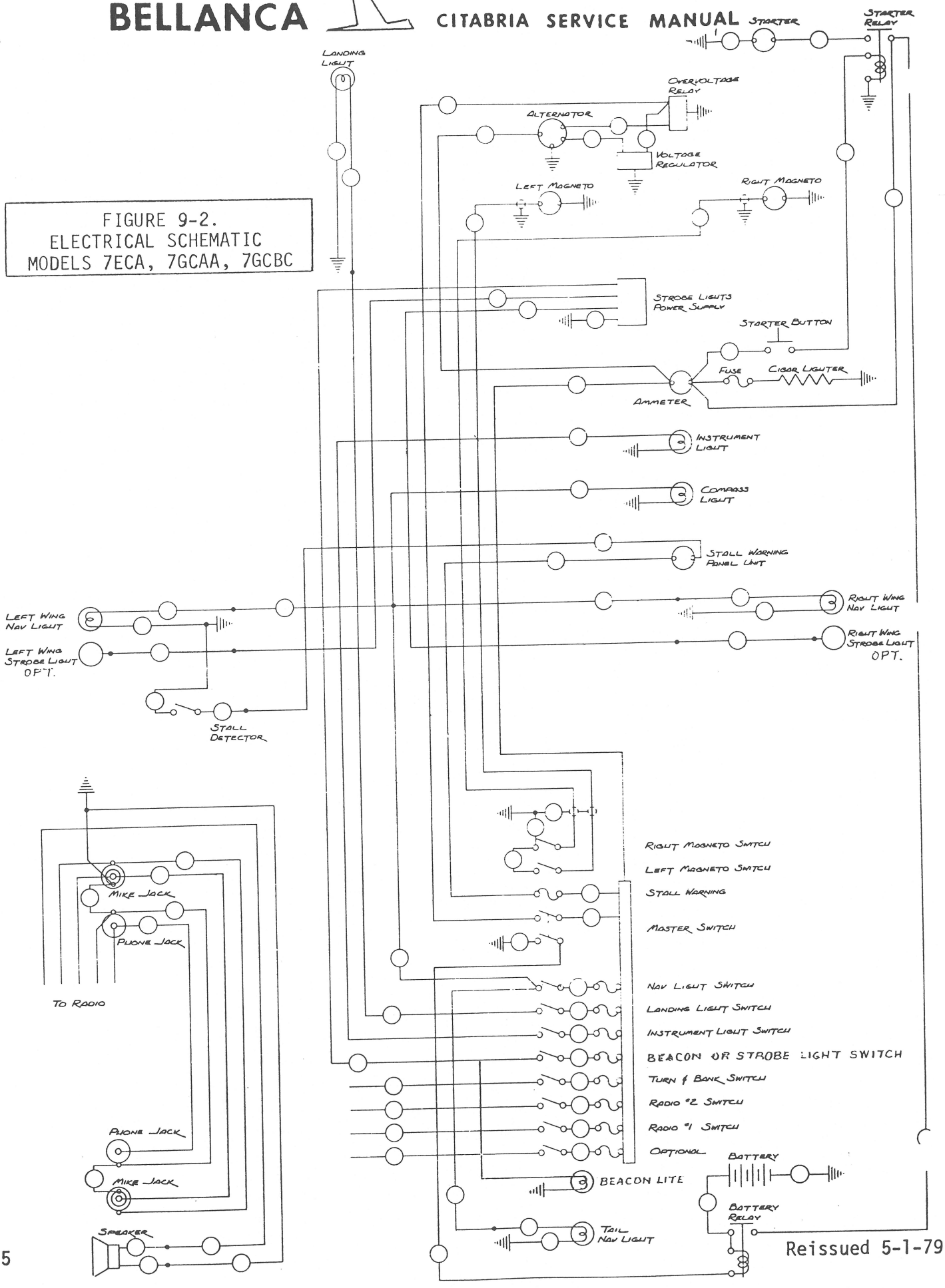

PPLICABLE SERIAL NO'S.

7 CA 1183-77 AND UP
7 CAA 335-77 AND UP
7GCBC 953-76, 959-77 AND UP

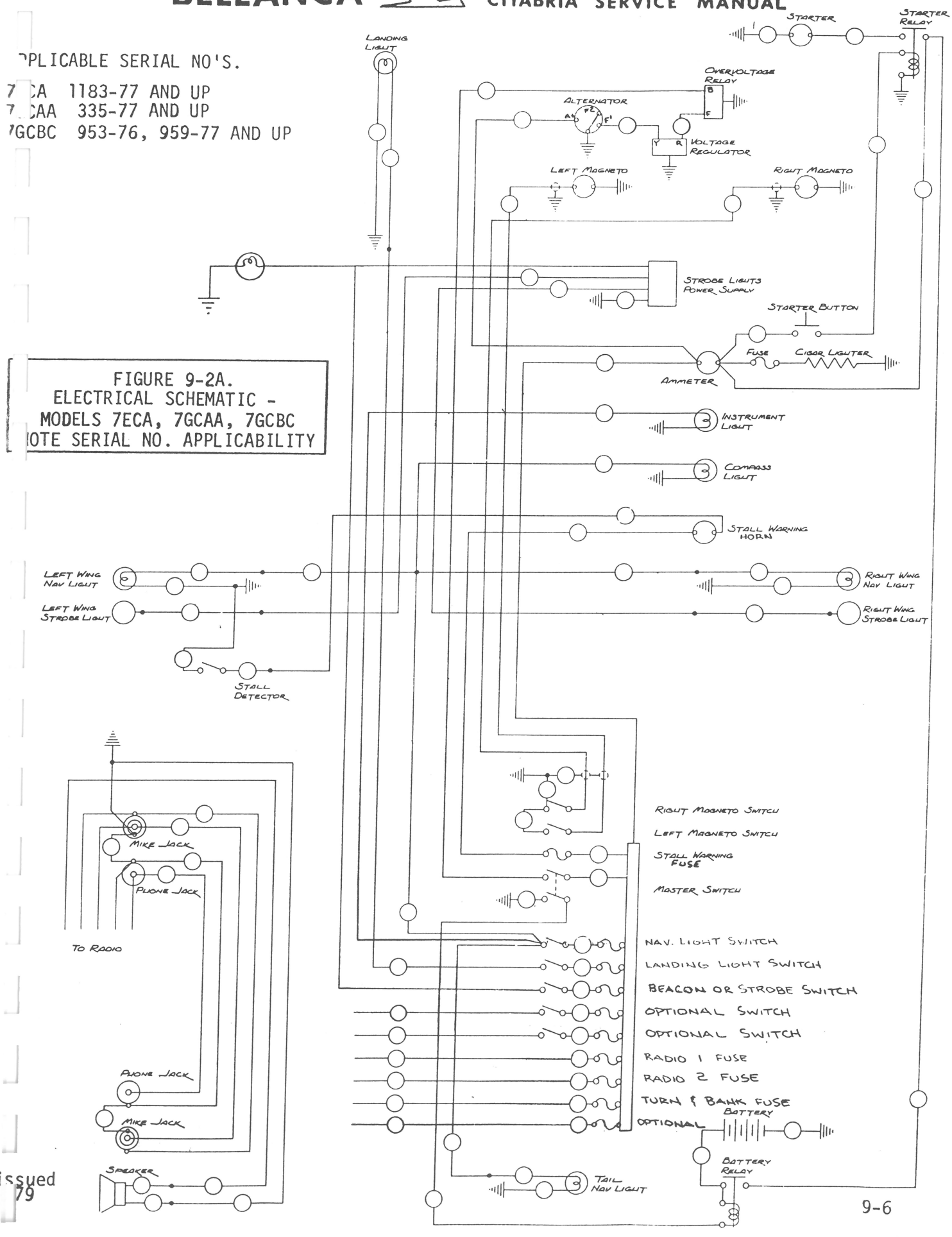

FIGURE 9-2A.
ELECTRICAL SCHEMATIC -
MODELS 7ECA, 7GCAA, 7GCBC
OTE SERIAL NO. APPLICABILITY

9-2. ELECTRICAL SYSTEM TROUBLESHOOTING

For troubleshooting Electrical System see Table 9-1.

TABLE 9-1. TROUBLESHOOTING

TROUBLE	CAUSE	REMEDY
	BATTERY	
Discharged battery.	Battery worn out.	Replace battery.
	Charging rate not set right.	Reset.
	Discharging rate too great.	Remove load when alternator is not charging and reduce use of equipment on ground.
	Standing too long.	Remove and recharge battery if left in unused airplane 3 weeks or more.
	Equipment left on accidentally.	Remove and recharge.
	Impurities in electrolyte.	Replace battery.
	Short circuit (ground) in wiring.	Check wiring.
	Broken cell partitions.	Replace.
Battery life is short.	Overcharge due to level of electrolyte being below top of plates.	Maintain electrolyte level.
	Heavy discharge.	Remove loads when generator is not charging.
	Sulfation due to disuse.	Replace.
	Impurities in electrolyte.	Replace battery.
	Low charging rate.	Adjust voltage regulator.
Cracked cell jars.	Hold-down bracket loose.	Replace battery and tighten.
	Frozen battery.	Replace battery.

TABLE 9-1. TROUBLESHOOTING

(Con't.)

TROUBLE	CAUSE	REMEDY
Electrolyte runs out of vent plugs.	Too much water added to battery and charging rate too high.	Drain and keep at proper level and adjust voltage regulator.
Compound on top of battery melts.	Charging rate too high.	Reduce charging rate by adjusting voltage regulator.
Excessive corrosion around battery.	Spillage from over-filling.	Use care in adding water.
	Vent lines leaking or clogged.	Repair or clean.
	Battery caps loose or broken.	Tighten or replace.
Battery freezes.	Discharged battery.	Replace battery.
	Water added and battery not charged immediately.	Always recharge battery for 1/2 hr. following addition of water in freezing weather.
Leaking battery jar.	Frozen.	Replace battery.
Battery polarity reversed.	Connected backwards on airplane or charger.	Battery should be slowly discharged completely and then charged correctly and tested.
Battery consumes excessive water.	Charging rate too high (if in all cells.)	Correct charging rate.
	Cracked jar (one cell only).	Replace battery.
No output from alternator.	Malfunction of alternator, alternator output circuit or field circuit.	Check alternator output and field circuits. Refer to Section 9-3.
Reduced output from alternator.	Open diode.	Check alternator. Refer to Section 9-3.

TABLE 9-1. TROUBLESHOOTING
(Con't.)

TROUBLE	CAUSE	REMEDY
	STARTER	
Motor fails to operate.	Low battery charge.	Check and recharge if necessary.
	Defective or improper wiring or loose connections.	Refer to electrical wiring diagram and check all wiring.
	Defective starter solenoid or control switch.	Replace faulty unit.
	Binding, worn, or improperly seated brushes with excessive side play.	Brushes should be free fit in the brush boxes without excessive side play. Binding brushes and brush boxes should be wiped clean with a gasoline moistened cloth. A new brush should be run in until at least 50% seated; however, if facilities are not available for running in brushes, then the brush should be properly seated by inserting a strip of number 0000 sandpaper between the brush and commutator, with the sanded side next to the brush. Pull sandpaper in the direction of rotation, being careful to keep it in the same contour as the commutator. CAUTION Do not use coarse sandpaper or emery cloth. After seating, clean thoroughly to remove all sand and metal particles to prevent excessive wear. Keep motor bear-

TABLE 9-1. TROUBLESHOOTING

(Con't.)

TROUBLE	CAUSE	REMEDY
Motor fails to operate. (Con't)		ing free from sand or metal particles.
	Dirty commutator.	If commutator is rough or dirty, smooth and polish with number 0000 sandpaper. If too rough and pitted, remove and turn down. Blow out all particles.
	Shorted, grounded or open armature.	Remove and replace with an armature known to be in good condition.
	Grounded or open field circuit.	Test, repair if possible or replace with a new part.
Low motor and cranking speed.	Worn, rough or improperly lubricated motor or starter gearing.	Disassembly, clean inspect, and relubricate, replacing bearings if worn.
	Same electrical causes as listed under "Motor fails to operate."	Same remedies listed for these troubles.
Excessive arcing of motor brushes.	Binding, worn, or improperly seated brush or brushes with excessive side play.	See information above dealing with this trouble.
	Dirty commutator, rough, pitted, or scored.	Clean as outlined above.
Excessive wear and arcing of motor brushes.	Rough, or scored commutator.	Remove and turn commutator down on a lathe.
	Armature assembly not concentric.	Reface commutator.

9-3. ALTERNATOR SYSTEM SERVICE PROCEDURES

9-4. GENERAL

ALTERNATORS: Prestolite P/N ALE-8406, 12 volt (40 amp)

Prestolite P/N ALY-8403, 12 volt (60 amp)

Prestolite P/N ALY-8420, 12 volt (60 amp)

REGULATORS: Prestolite P/N VSF-7203

OVERVOLT RELAYS: Prestolite X17621

Prestolite X16799

ALTERNATORS: Prestolite P/N ALY-8420G, 12 volt (60 amp)

This alternator is internally grounded.

Figure 9-1A or 9-2A shows the schematic and serial number applicability.

REGULATORS: Prestolite P/N VFR-3224

Prestolite P/N VFR-4224

OVERVOLT RELAYS: Prestolite FOC-4002B

This procedure is issued to provide field personnel with service instructions when inspecting or servicing the alternator charging system.

Always be sure that the master switch is off:

a. When repairs are being made to the alternator or voltage regulator.

b. Before connecting or disconnecting test equipment. Note: When a voltmeter only is to be used for circuit testing, the master switch need not be turned off provided caution is used when connecting and disconnecting the voltmeter.

c. When changing or charging batteries and connecting booster

batteries.

9-5. CAUTION

a. Do not connect battery into system with polarity reversed.

b. Do not attempt to polarize alternator.

c. Do not connect ground (even momentarily) to either the regulator or alternator field terminals except as noted in Section 9-10.

d. Do not interchange the leads to the regulator.

e. Do not (even momentarily) connect the regulator terminals together.

f. Do not attempt to operate the regulator unless it is well grounded. Ground return is accomplished thru the firewall mounting.

g. Do not ground alternator output terminal.

h. Output lead must not be removed while alternator is operating.

i. Polarity must be connected correctly while using a booster battery or battery charger.

9-6. VISUAL INSPECTION

a. Inspect the battery cable connections and battery electrolyte.

b. Check all connectors in the system to be sure they are clean and tight.

c. Inspect the alternator, regulator, overvolt relay and wiring for physical damage.

d. Check the alternator drive belt tension.

9-7. MASTER SWITCH - FIGURE 9-3 OR FIGURE 9-5

No charge

a. Turn master switch on and off - you should hear master switch solenoid click on and off with switch, if not;

1. Check for defective master switch.

2. Check for defective master switch solenoid, wiring and connectors or low battery.

b. Turn master switch on - check voltage at overvolt relay "B" Terminal and if no voltage; check for defective master switch wiring and connectors.

9-8. OVERVOLT RELAY - FIGURE 9-3 OR FIGURE 9-5

No Charge

a. Turn master switch on - check voltage at overvolt relay "F" Terminal and if no voltage; replace overvolt relay.

Note: Overvolt relay may be by-passed with jumper wire, but do not operate engine with accessory equipment on as high voltage may damage this equipment.

9-9. REGULATOR - FIGURE 5-3 OR FIGURE 9-5

High Charge

a. High charge rate and drops to zero in few seconds.

1. Inspect for grounded "F" Terminal screws at firewall. (Figure 9-3 only)

2. Inspect for grounded wire or connector between regulator and alternator F_1 terminal.

9-10. ALTERNATOR AND REGULATOR - FIGURE 9-3 OR FIGURE 9-5

A. No Charge

1. Turn master switch off.

2. Ground "F" terminal or yellow wire at regulator with jumper wire.

3. Turn master switch on and start engine.

> CAUTION
>
> Do not operate engine over idle or 650 RPM. Do not operate engine more than the few seconds it takes to complete test. Do not turn radio equipment on.

4. If ammeter indicates charge (overvolt relay will cut off in few seconds) regulator is faulty.

5. If ammeter indicates no charge, alternator or wire to alternator F_1 is faulty.

B. High Charge

1. High charge for up to 2 minutes and drops off to zero yet wires to regulator or wire and connectors to F_1 terminal on alternator are not grounded. - Faulty alternator - Regulator set too high. (See Section 9-11.g.) Before condemning alternator, check all other components of system.

9-11. TESTING THE REGULATOR FIGURE 9-4

Procedure

a. Connect test meters as shown in Figure 9-4.

b. All circuit connections must be clean and tight including test instruments.

c. Start the engine and run at 1100 to 1200 RPM.

d. Turn on accessories as needed to establish 10 to 15 ampere electrical load or use a carbon-pile across the battery to obtain this charge rate.

e. After 1 minute operating time, check the regulator operating voltage as indicated by the voltmeter.

f. The regulator should be indicating 14.2 volts when controlling a load of 10 to 15 amps after 1 minute operation.

g. If the voltmeter reading indicates that the operating voltage is not within limits, lift the plastic plug from top of regulator and adjust to the desired value. (Do not force adjusting screw.) Adjustment spread is 13.0 to 15.0 volts. Turn clockwise to increase output.

9-12. TESTING THE REGULATOR FIGURE 9-5

The below test procedure is for aircraft equipped with internally grounded alternator and wiring schematic per Figure 9-1A or 9-2A. (Note S/N applicability). The regulators are fully transistorized, solid state and non-adjustable. All components are potted in an aluminum case making the units non-repairable.

Test Procedure

a. Connect test meter as shown in Figure 9-6.

b. All circuit connections must be clean and tight including test instruments.

c. Start the engine and run at 1100 to 1200 RPM.

d. Turn on accessories as needed to establish a 15 to 25 ampere

electrical load or use a carbon-pile across the battery to obtain this charge rate.

e. The test voltmeter must indicate between 13.6 and 14.6 volts after a 10 minute warm up controlling 10 amperes.

f. Ambient temperature must be between 50°F and 100°F when making this test.

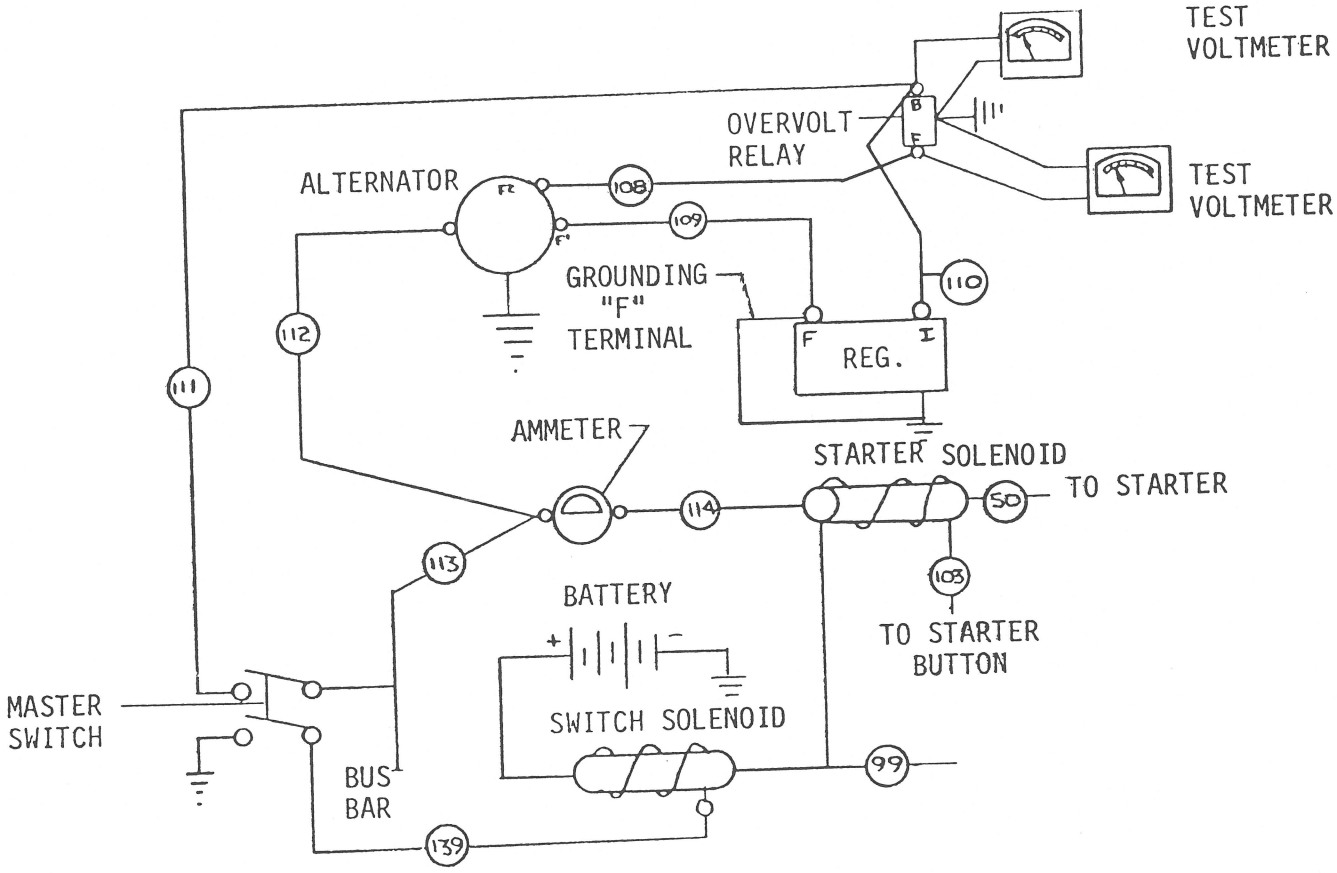

FIGURE 9-3.

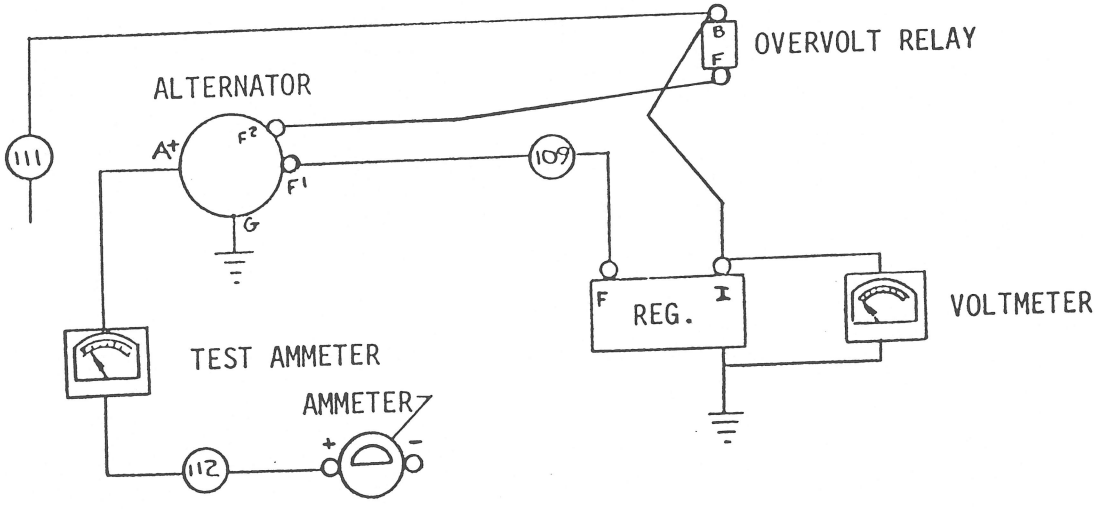

FIGURE 9-4.

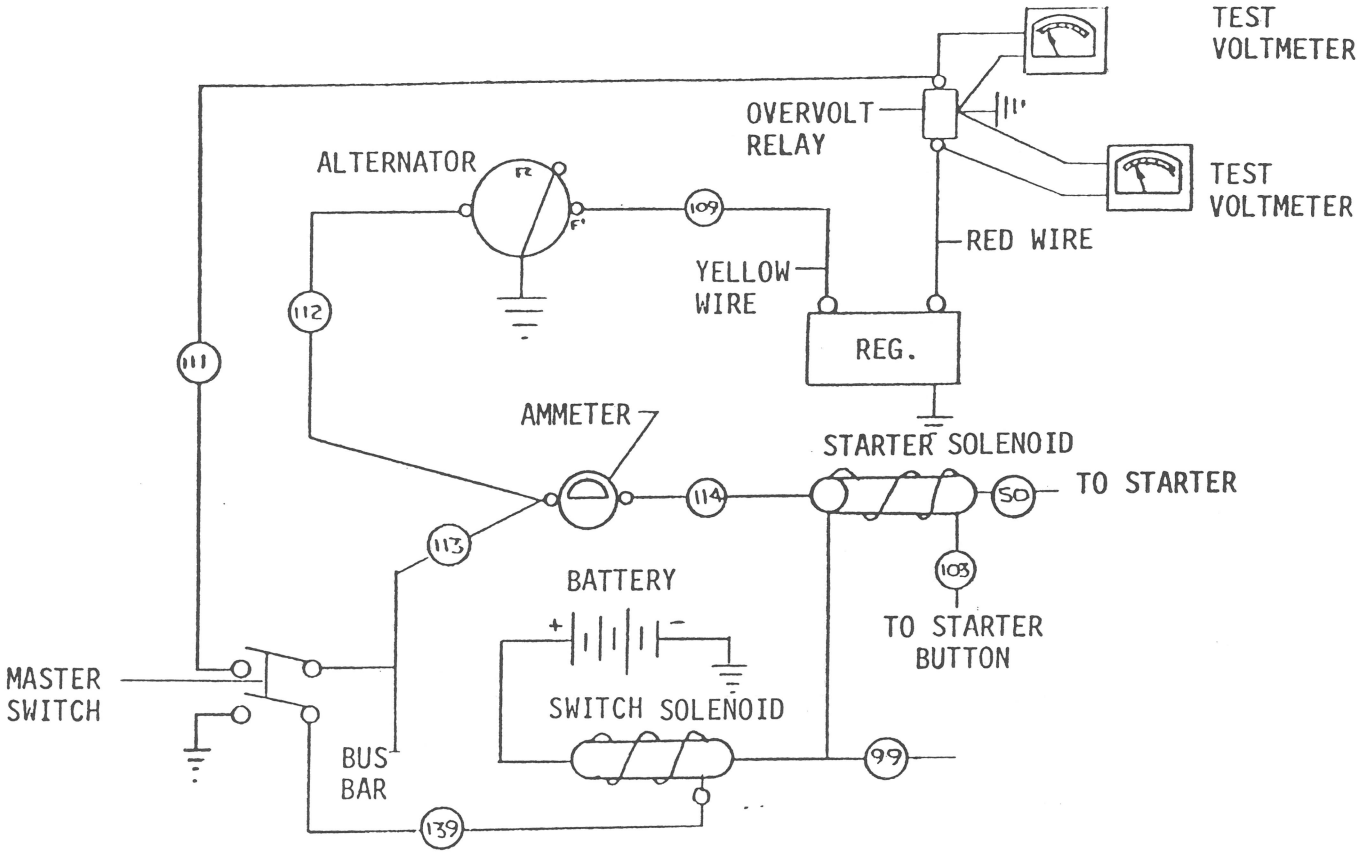

FIGURE 9-5.

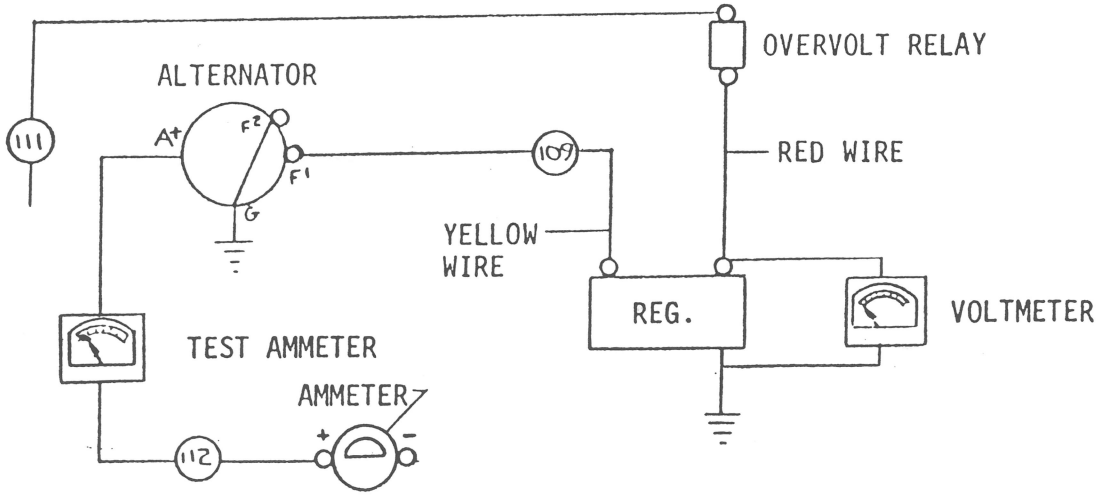

FIGURE 9-6.

SECTION 10

INSTRUMENTS

		PAGE
10-1.	GENERAL - INSTRUMENTS	10-2
10-2.	PANEL MOUNTING	10-2
10-3.	VACUUM SYSTEM	10-2
10-4.	SUCTION GAUGE	10-2
10-5.	VACUUM REGULATOR VALVE - GENERAL	10-3
10-6.	VACUUM REGULATOR VALVE REMOVAL & REPLACEMENT	10-3
10-7.	VACUUM REGULATOR VALVE ADJUSTMENTS	10-3
10-8.	TROUBLESHOOTING	10-4
10-9.	VACUUM PUMP - GENERAL	10-5
10-10.	REMOVAL & REPLACEMENT - VACUUM PUMP	10-5
10-11.	TROUBLESHOOTING VACUUM PUMP	10-5
10-12.	REMOVAL & INSTALLATION OF INSTRUMENTS	10-5
10-13.	DIRECTIONAL GYRO INDICATOR - TROUBLESHOOTING	10-6
10-14.	GYRO HORIZON - TROUBLESHOOTING	10-7
10-15.	RATE OF CLIMB INDICATOR	10-7
10-16.	SENSITIVE ALTIMETER TROUBLESHOOTING	10-8
10-17.	AIRSPEED INDICATOR TROUBLESHOOTING	10-9
10-18.	MAGNETIC COMPASS TROUBLESHOOTING	10-9
10-19.	TACHOMETER TROUBLESHOOTING	10-10
10-20.	TURN & BANK INDICATOR (ELECTRIC) TROUBLESHOOTING	10-11

SECTION 10

INSTRUMENTS

10-1. GENERAL - INSTRUMENTS

The Citabria is equipped with basic flight and engine instruments as standard. Optional flight instruments may be installed depending upon instrument panel hole availability. The first part of this section will pertain to the maintenance and troubleshooting of the instruments and their systems.

10-2. PANEL MOUNTING

The instrument panel is shock mounted to the aircraft frame to dampen out engine vibration and prolong the life of the instruments. The following Citabria aircraft were manufactured without shock mounting of the instrument panel.

7ECA Serial No. 1224-78 thru 1256-78

7GCAA Serial No. 349-78 thru 360-78

7GCBC Serial No. 1006-78 thru 1025-78

If shock mounting of the instrument panel on these aircraft is desired, it may be accomplished according to Bellanca Service Kit No. 267.

10-3. VACUUM SYSTEM

The vacuum system employed to operate the gyro instruments is comprised of an engine driven dry vacuum pump, vacuum regulator valve and the necessary tubing to complete the system.

10-4. SUCTION GAUGE

The suction gauge, which is mounted on the instrument panel,

is inches of mercury and indicates the amount of vacuum created by the engine driven vacuum pump. For trouble-shooting of this instrument, refer to Table 10-1 of this section.

10-5. VACUUM REGULATOR VALVE - GENERAL

One vacuum regulator valve is incorporated in the system to control vacuum pressure to the gyro instrument. The regulator is mounted on the top of the inside firewall.

10-6. VACUUM REGULATOR VALVE REMOVAL AND REPLACEMENT

a. To remove the regulator valve, disconnect the two lines, remove the mounting screws and remove the valve.

b. Replace the regulator valve in the reverse order given for removal. Check the complete system for proper operation.

10-7. VACUUM REGULATOR VALVE ADJUSTMENTS

a. Loosen the locking nut.

b. With the engine running a medium RPM, the suction gauge should indicate between 3.5 and 5.0 inches of mercury. If the pressure reading fails to fall within this range, shut down the engine and adjust the regulator valve by moving the adjustment screw clockwise to increase the pressure and counter-clockwise to decrease the pressure. Start the engine and repeat the check.

c. After the valve has been adjusted within the proper range, retighten the lock nut.

10-8. TROUBLESHOOTING

For troubleshooting the regulator valve, refer to Section 10-1.

TABLE 10-1. VACUUM SYSTEM

TROUBLE	CAUSE	REMEDY
No vacuum pressure gauge indication.	Pump inoperative. Disconnected, broken or restricted lines.	Replace pump. Locate trouble and correct.
No vacuum pressure gauge indication at instrument.	Hose from instrument to gauge leaking or restricted.	Check all lines and connections.
No vacuum suction gauge indication at either instrument or source.	Faulty gauge. Malfunctioning, regulator valve, or vacuum pump.	Check operation of instruments. If operations normal, replace gauge. If instruments are inoperative, check operation of vacuum pump or regulator valve.
Low vacuum system pressure.	Vacuum regulator valve incorrectly adjusted. Leaking of the system lines or fitting.	Adjust regulator valves in accordance with (Adjustments) of this section. Check all lines and fittings.
Normal pressure indication, but sluggish operation of instruments.	Instruments air filter elements dirty.	Remove and clean or replace.
High system pressure.	Vacuum regulator valve incorrectly adjusted.	Adjust in accordance with (Adjustments) of this section.
	Vacuum regulator valve sticking or dirty screen.	Clean and check operation of regulator valve.

10-9. VACUUM PUMP - GENERAL

The vacuum pump used on the Citabria is the rotary six vane, positive displacement type. This unit consists essentially of an aluminum housing containing a tempered sleeve in which an offset rotor, with six carbon vanes, is incorporated. This assembly is driven by means of a coupling mated to the engine drive gear assembly. The pump is mounted on the accessory section of the engine.

10-10. REMOVAL AND REPLACEMENT - VACUUM PUMP

a. Remove top portion of cowling.

b. Loosen the two hose clamps and remove the two hoses from the pump fittings. Note: Note location of hoses for reinstallation.

c. Remove the pump by removal of the four retaining nuts, lock washer and plain washers.

d. Reinstall pump in reverse order of removal, noting alignment of spline on the pump drive with the spline on the engine drive assembly.

10-11. TROUBLESHOOTING VACUUM PUMP

For troubleshooting of the pump; refer to Table 10-1 of this section.

10-12. REMOVAL AND INSTALLATION OF INSTRUMENTS

Since all the instruments are mounted in a similar manner, a discription of a typical removal and installation is provided as a guide. Special care should be taken when any operation re-

lated to the instruments is performed.

a. Remove the instrument top access panel by removing the retaining screws, disconnect the compass light wires and lift off the panel.

b. Remove the vacuum or electric connections to the instrument. Note: Tag instrument connections for ease of installation.

c. Remove mounting screws and remove instrument.

d. Install instrument in reverse order of removal.

10-13. DIRECTIONAL GYRO INDICATOR - TROUBLESHOOTING

TABLE 10-2. DIRECTIONAL GYRO INDICATOR

TROUBLE	CAUSE	REMEDY
Excess drift in either direction.	Excessive vibration with amplitude more than 0.006 inch.	Check shock mounts.
	Insufficient vacuum. If vacuum below 3.5 inch hg., check for the following.	
	a. Relief valve improperly adjusted.	a. Adjust
	b. Incorrect gauge reading.	b. Recalibrate.
	c. Pump failure.	c. Repair or replace.
	d. Vacuum line kinked or leaking.	d. Check and repair, Check for collapsed inner wall of hose.
	Defective instrument.	Replace instrument.
Dial spins continuously.	Defective mechanism.	Replace.

10-14. GYRO HORIZON - TROUBLESHOOTING

TABLE 10-3. GYRO HORIZON INDICATOR

TROUBLE	CAUSE	REMEDY
Bar fails to respond.	Insufficient vacuum.	Check pump and tubing.
Bar does not settle.	Excessive vibration.	Check shock mounts. Replace if necessary.
Bar does not settle.	Insufficient vacuum.	Check line and pump. Adjust valve.
	Defective instrument.	Replace.
Bar oscillates or shimmies continuously.	Excessive vibration.	Check shock mounts. Replace if necessary.
	Vacuum too high.	Adjust valve.
	Defective mechanism.	Replace instrument.

10-15. RATE OF CLIMB INDICATOR

TABLE 10-4. RATE OF CLIMB INDICATOR

TROUBLE	CAUSE	REMEDY
Pointer does not set on zero.	Aging of diaphrahm.	Reset pointer to zero by means of setting screw. Tap instrument while resetting.
Pointer fails to respond.	Obstruction in static line.	Disconnect all instruments connected to the static line. Check individual instruments for obstruction in lines.
Pointer oscillates.	Leaks in static lines.	Disconnect all instruments connected to the static line. Check individual instruments for leaks. Reconnect instruments to static line and test installation for leaks.
	Defective mechanism.	Replace instrument.

10-16. SENSITIVE ALTIMETER TROUBLESHOOTING

TABLE 10-5. ALTIMETER

TROUBLE	CAUSE	REMEDY
Excessive scale error.	Improper calibration adjustment.	Replace instrument.
Excessive pointer oscillation.	Defective mechanism.	Replace instrument.
High reading.	Improper venting.	Eliminate leak in static pressure system and check alignment of static tube.
Setting knob is hard to turn.	Wrong lubrication or lack of lubrication.	Replace instruments.
Inner reference marker fails to move when setting knob is rotated.	Out of engagement.	Replace instrument.
Setting knob set screw loose or missing.	Excessive vibration.	Tighten instrument screw, if loose, Replace instrument, if screw is missing.
Cracked or loose cover glass.	Excessive vibration.	Replace instrument.
Dull or discolored luminous markings.	Age.	Replace instrument.
Barometric scale and reference markers out of synchronism.	Slippage of mating parts.	Replace instrument.
Barometric scale and reference markers out of synchronism with pointers.	Drift in mechanism.	Reset pointers.

10-17. AIRSPEED INDICATOR TROUBLESHOOTING

TABLE 10-6. AIRSPEED TUBES AND INDICATOR

TROUBLE	CAUSE	REMEDY
Indicator inoperative.	Stoppage of pitot and/or static tube-ice, dirt, etc.	Disconnect pitot and static line from all instruments and blow out with air pressure.
Instrument indicating too slow.	Stoppage of pitot and/or static tube-ice, dirt, etc. Leak in pitot system.	Disconnect pitot and static line from all instruments and blow out with air pressure.
Instrument indicating too fast.	Leak in static system. Water in static system.	Correct leak. Disconnect static line from instrument and blow out water.
Pointer of instrument oscillates.	Leak in static system. Leak in instrument case.	Correct leak. Check for leak and seal.

10-18. MAGNETIC COMPASS TROUBLESHOOTING

TABLE 10-7. MAGNETIC COMPASS

TROUBLE	CAUSE	REMEDY
Excessive card error.	Compass not properly compensated.	Compensate instrument.
	External magnetic interference.	Locate magnetic interference and eliminate if possible.
Excessive card oscillation.	Improper mounting on instrument panel.	Align instrument.
	Insufficient liquid.	Replace instrument.
Card sluggish.	Weak card magnet.	Replace instrument.
	Excessive pivot friction or broken jewel.	Replace instrument.
	Instrument too heavily compensated.	Remove excess compensation.

TABLE 10-7. MAGNETIC COMPASS (CON'T)

TROUBLE	CAUSE	REMEDY
Liquid leakage.	Loose bezel screws.	Replace instruments.
	Broken cover glass.	Replace instrument.
	Defective sealing gaskets.	Replace instrument.
Discolored luminous markings.	Age.	Replace instrument.
Defective light.	Burned out lamp or circuit.	Check lamp or continuity of wiring.

10-19. TACHOMETER TROUBLESHOOTING

TABLE 10-8. TACHOMETER

TROUBLE	CAUSE	REMEDY
No reading on indicator, either permanent or intermittent.	Broken shaft.	Replace shaft.
	Springs weak.	Replace instrument.
Pointer oscillates excessively.	Rough spot on or sharp bend in shaft.	Repair or replace.
	Excess friction in instrument.	Replace instrument.

10-20. TURN AND BANK INDICATOR (ELECTRIC) TROUBLESHOOTING

TABLE 10-9. TURN AND BANK INDICATOR

TROUBLE	CAUSE	REMEDY
Pointer fails to respond.	Foreign matter lodged in instrument.	Replace instrument.
	No electrical circuit.	Check for voltage at instrument.
Incorrect sensitivity.	Misadjustment of sensitivity spring.	Adjust by means of sensitivity spring screw. If this pulls the pointer from zero, replace instrument.
Pointer does not set on zero.	Gimbal and rotor assembly out of balance.	Replace instrument.
	Pointer incorrectly set on its staff.	Replace instrument.
	Sensitivity adjustment pulls pointer off zero.	Replace instrument.
Vibrating pointer.	Gimbal and rotor assembly out of blance.	Replace instrument.
	Pitted or worn pivots or bearings.	Replace instrument.
In low temperature pointer fails to respond or does so sluggishly and with insufficient deflection.	Oil has become too thick.	Replace instrument.
	Insufficient bearing clearance.	Replace instrument.
Pointer sluggish in returning to zero and does not set on zero when stationary.	Oil or dirt between damping pistons and cylinder.	Replace instrument.
	Excessive clearance between rotor and rotor pivots.	Replace instrument.

TABLE 10-9. TURN AND BANK INDICATOR (CON'T)

TROUBLE	CAUSE	REMEDY
Ball in inclinometer does not center.	Instrument out of alignment on panel.	Correct alignment.

SECTION 11

INSTALLATION, REPAIR AND FINISHING OF FABRIC COVERING

		PAGE
11-1.	GENERAL	11-2
11-2.	FABRIC INSTALLATION PROCEDURES	11-2
11-3.	FINISHING MATERIALS	11-4
11-4.	APPLICATION OF DOPES	11-4

SECTION 11

INSTALLATION, REPAIR AND FINISHING OF FABRIC COVERING

11-1. GENERAL

This section comprises information for installation and finishing of the dacron fabric used to cover the fuselage, wings and all control surfaces. For information concerning the repair of fabric, refer to Chapter 3 "Fabric Covering" of FAA AC 43.13-1 publication. Paragraph 11-2 of this manual will familiarize you with procedures which are particular to the Citabria and the use of dacron fabric. This includes attachment of fabric to the wing ribs and the shrinking or tautening procedures for dacron. When recovering the aircraft or one of its components, it is recommeded that the old covering envelope be saved to be used as a pattern for locating inspection holes, tapes, patches, etc. When removing old fabric, take special note to methods used to attach fabric around door frame, window frame, longerons, channels, wood fairing, etc. If additional information is desired, a factory drawing is available.

11-2. FABRIC INSTALLATION PROCEDURES

a. The application of fabric to the fuselage must consist of two sections and to be installed in this order:

   1. Fin and fuselage blanket with top center seam.
   2. Bottom fuselage.

b. The application of fabric to the wings and surfaces should follow the following rules:

1. Wrap using blanket method beginning at trailing edge, wrapping blanket around leading edge and attaching at trailing edges.
2. Use 3M 847 adhesvie or equivalent at trailing edge and in aileron bay. Lap over tip area using clear cement on wing tip (Swifts adhesive #7315 or equivalent.) Heat, shrink and install fabric attach rivets in proper locations.

c. The fin and fuselage top and bottom sections are glued to airframe members or to wooden stringers with EC-847 adhesive (Manufactured by 3M Co.). The side pieces are glued to the longerons with a strip of EC-847 adhesive. (Pull and trim bottom fabric so longeron lap is straight) glue lap to side fabric using Super Seam Cement. (Manufactured by Cooper Eng., California) or Swifts Adhesive #7315 (Manufactured by Swifts Co., Chicago, Illinois.) Allow lap to dry 20 minutes before tautening with heat.

d. After installing fabric to airframe according to the above, the heat shrinking or tautening procedures must conform to the following:

e. Apply heat to the fabric using an ordinary household electric iron set on wool temperature. The heat range for shrinking must be more than 250° but not over 400°. The iron must be kept in motion with a rate of approximately 5" per second. When shrinking large surfaces, two or three applications of heat - tautening gives the best results. Wrinkles and saging

spots can be removed without temperature increase - by momentarily pausing for approximately two seconds over the wrinkled area. Discontinue the heat process when the envelope has acquired a wrinkle free drumlike tautness. Do not overtauten. Care must be taken never to heat the fabric in excess of 450°F as the fabric melts and strength decreases seriously. If through error the fabric is overheated, the destroyed area will lose its cloth weave and assume a clearly deteriorated celluloid-like texture. The destroyed area should then be replaced.

f. After the heat tautening process, the surface or part must be finished as per following sections.

11-3. FINISHING MATERIALS

a. FABRIC - This specification covers the use of the DACRON fabric.

b. TAPE - Straight or pinked edged tapes must be Grade "A" cotton, or Dacron predoped with Nitrate dope.

c. DOPE - All clear coats must be non-tautening cellulose nitrate dope. Silver, white and trim coats must be cellulose acetate butyrate dope (CAB).

d. THINNER - Thinner must be nitrate or butyrate reducer, as appropriate. Dope may be thinned with blush retarder only when necessary to prevent blushing.

11-4. APPLICATION OF DOPES

a. Attach fabric to frame and shrink.

b. Brush or spray (2) coats of clear nitrate dope mixed approximately (1) part dope to (1) part thinner. Let dry until not tacky between coats. Work dope into fabric and brush out all runs and drops of dope.

c. Apply fabric tapes, patches, grommets and inspection rings as follows: Brush a heavy coat of clear nitrate dope where tape is applied. Apply tape immediately to insure that dope penetrates cloth. Smooth out dope either with damp cloth or fingers, using dope as lubricant. Brush coat of dope over entire tape surface. Let dry until not tacky to touch.

d. Brush or spray on (1) coat of clear nitrate dope. Let dry until not tacky between coats.

e. Let dry at least (1) hour before colored coats are applied.

f. Thin dope as necessary to provide smooth application.

g. Spary (2) cross coats silver butyrate dope mixed approximately (45) minutes between coats.

h. Spray (2) cross coats white butyrate dope mixed approximately (1) part dope to (1) part thinner. Let dry (1) hour between coats.

i. Let dry until masking tape sticks well to painted surface (1 1/2 hours).

j. Mask and spray (1) cross coat colored butyrate dope mixed approximately (1) part dope to (1) part thinner. Note: Blush retarder is added (1 qt.) to (5 gal.) dope.

k. The most important part of any finishing job with dope

spraying on dacron is sufficient drying times between coats, proper initial brush coating on fabric and tapes, and good workmanship.

SPARK PLUG .017 to .021 PARA 7-13

IDLE SPEED 500 to 600 RPM PARA 7-14

25° BTC